THE THREE STOOGES

© COPYRIGHT 1984 NORMAN MAURER PRODUCTIONS, INC./COLUMBIA PICTURES INDUSTRIES, INC.

MYLSTAR

INSTRUCTION MANUAL

ADDENDUM

ATTACHED TO AND PART OF THE THREE STOOGES (GAME GV-113) INSTRUCTION MANUAL

GAME AS SHIPPED VARIES FROM THE INSTRUCTION MANUAL AS PRINTED

1. Add the following to VIII. GENERAL INFORMATION--C. FUSES--BOTTOM PANEL on page 9 of the instruction manual:

   F12 INPUT LINE FUSE 8 Amp SLO-BLO PART NO. EL-26

2. Make the following changes as shown in the figure below, in the partial illustration of the PRIMARY POWER/FILTER BOARDS/INTER-CONNECTION DIAGRAM schematic on pages 30, 31 and 32 in the instruction manual:

   a) Add fuse F12 to the POWER INPUT LINE as shown in the figure below.

   b) Change wire color 700, between POWER LINE INPUT and F12 to 766, add wire color 700 from the F12 Fuse (Output Side), to the junction of the 0 wire which is part of SW1 and wire 700 which goes to A12J2-1

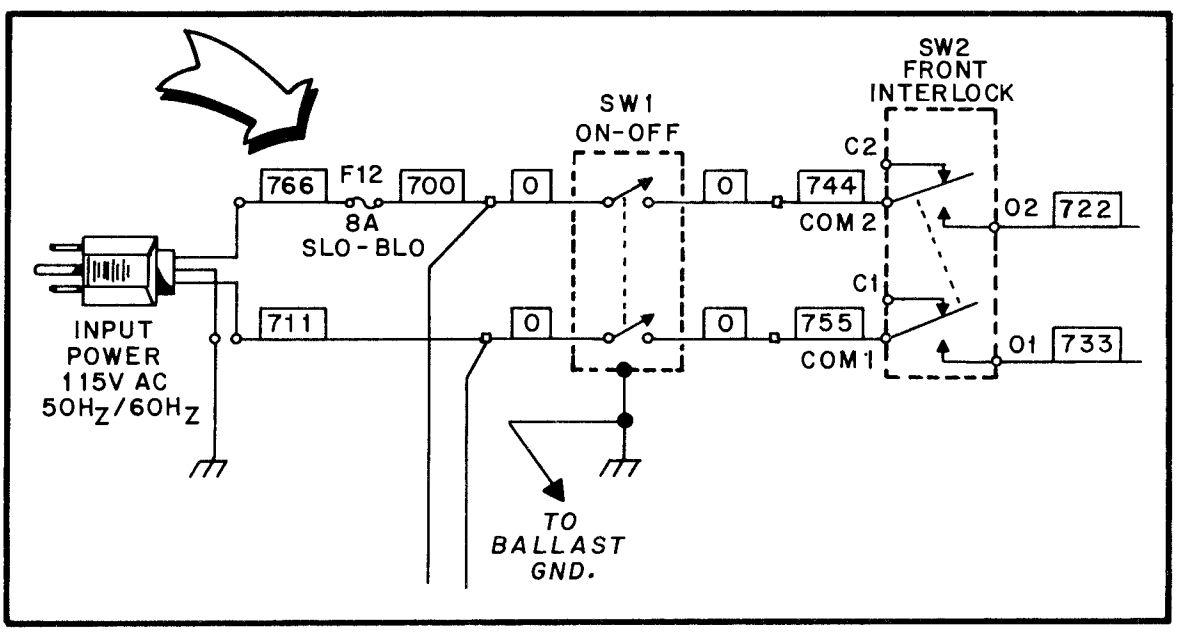

THE THREE STOOGES (GAME GV-113)
INSTRUCTION MANUAL

TABLE OF CONTENTS

SEC.		PAGE
I.	INSTALLATION	2
II.	INITIALIZATION	3
III.	GAME OPERATION	3
IV.	GAME PLAY AND SCORING	4
V.	SOUND/SPEECH	6
VI.	GAME ADJUSTMENTS/OPTIONS	6
VII.	BOOKKEEPING AND SELF TEST	7
VIII.	GENERAL INFORMATION	9
IX.	THEORY OF OPERATION	11
X.	WIRING AND SCHEMATIC DIAGRAMS	12
XI.	PARTS INFORMATION	33
	WELLS GARDNER MONITOR, SERVICE AND OPERATION MANUAL (Attached)	

"WARNING: This equipment generates, uses, and can radiate radio frequency energy and if not installed and used in accordance with the instruction manual, may cause interference to radio communications. It has been tested and found to comply with the limits for a Class A computing device pursuant to Subpart J of Part 15 of FCC Rules, which are designed to provide reasonable protection against such interference when operated in a commercial environment. Operation of this equipment in a residential area is likely to cause interference in which case the user at his own expense will be required to take whatever measures may be required to correct the interference."

NOTICE

WARRANTY INFORMATION IS LOCATED ON THE INSIDE BACK COVEI

OR SERVICE, CALL TOLL FREE: 1-800-323-9121; (ILLINOIS) 1-800-942-1

I. INSTALLATION

THE THREE STOOGES

© COPYRIGHT 1984 NORMAN MAURER PRODUCTIONS, INC./COLUMBIA PICTURES INDUSTRIES, INC.

A. SET-UP

1. Carefully inspect the exterior of the game for any damage which might have occurred during shipment.
2. Unlock and open the rear cabinet door.
3. Check that all plug in connectors are seated firmly. The connectors are keyed so they will only go in one way.
4. Remove the binding strap from the line cord, and install the line cord plate in the groove provided.
5. Cabinet levelers (2) are stored within the cash box for shipping purposes. Install and adjust as necessary.

B. CHECK-OUT

1. Check that all cables are free of moving parts.
2. Check for any loose wires.
3. Check for loose solder or foreign matter on switches and power supply assemblies.
4. Be certain all fuses are seated firmly.
5. Be sure transformer wiring corresponds to the supply voltage.
6. Refer to section VI to make all the necessary game adjustments.
7. Reassemble the game.
8. Plug the line cord into a properly grounded 3-wire receptacle ONLY!!

C. CONTROL PANEL REMOVAL

1. Unplug the game.
2. Unlock and open the coin chute door.
3. Reach in through the coin chute door and remove the wing nut and flat washer from each of the two carriage bolts which secure the control panel to the game. Unlatch the control panel latch at the top center of the panel. Note where the latch strike plate is located. Remove the carriage bolts.
4. Pull the control panel back, grasp it at the front edge as far back as it will go (approximately ¼").
5. Raise the front of the control panel approximately one inch above its supports and lift the entire assembly high enough to disconnect A9J1/A9P1 and A9J2/A9P2.
6. Remove the entire control panel assembly from the game.
7. The joystick's and leaf-switches are now accessible for removal or cleaning.
8. For reassembly, reverse the above procedure.

D. MONITOR REMOVAL

1. Unplug the game.
2. Perform the control panel assembly removal procedure (Section C).
3. Unlock and open the rear cabinet door.
4. NOTE: The color monitor contains HIGH VOLTAGES delivering LETHAL quantities of energy. Do not attempt to service the

I. INSTALLATION

monitor until you have shorted the anode plug on the picture tube to ground.

5. Disconnect the video plug A17J1, the monitor power supply plug A12J3/A12P3 and the ground wire from the monitor chassis.
6. From the rear of the game, remove the one nut and one washer from each of the four carriage bolts used to secure the monitor to the platform.
7. Remove the monitor from the rear of the game, being careful to clear all cables from the CRT neck.
8. For reassembly, reverse the above procedure.

E. SPEAKER ASSEMBLY AND MARQUEE REMOVAL

1. Unplug the game.
2. Unlock and open the back door.
3. Unplug the A15-J1/P1 connector.
4. Unlatch the two latches on the rear of the Speaker Assembly Panel located inside the back door above the monitor.
5. On the front of the game, pull down on the lower molding under the marquee. The Speaker Assembly will lower to allow removal of the marquee.
6. Remove the marquee by lifting it upward out of its track. The Speaker Assembly and Illumination Assembly are now accessible for servicing.
7. Tilt the front of the Speaker Assembly downward while lifting the center upward.

   Pull the assembly straight out to remove. Be careful not to pinch the Speaker Assembly cable.

8. For reassembly, reverse the above procedure. When replacing the marquee:
   a. Tilt the front of the Speaker Assembly downward.
   b. Place the bottom of the marquee in the lower molding track on the front of the assembly.
   c. Apply slight pressure with your thumbs to the lower left and right corners of the marquee.
   d. Slowly raise the Speaker Assembly until the top of the marquee is in place in the upper track in the top molding.
   e. Be certain to reconnect the A15-J1/P1 connector and relatch the rear assembly latches.

II. INITIALIZATION

TURN GAME ON

Immediately, the coin chute lamps and the speaker marquee lamp will turn on.

AFTER A TEN SECOND DELAY

A. The attract mode appears on the screen.

B. The playing field cycles through the following:

1. High Game to Date screen
2. Instruction Set
3. Game Play Cycle

III. GAME OPERATION

A. GAME START

1. Insert coins into coin chute.
   a. Coin chute tune is played.
   b. Total credits are displayed on screen.
2. Press one (Larry), two (Moe) or three (Curly) player button to start game.
   a. Total credits are decreased by one, two or three.
   b. Choose Larry, Moe or Curly by moving the respective joystick.
   c. Game initializes.

III. GAME OPERATION, IV. GAME PLAY AND SCORING

B. ONE PLAYER

1. The player's selected Stooge picture and name is displayed at top of screen.

C. ADDITIONAL PLAYERS

1. Additional players are indicated by their selected Stooge picture and name at top of screen.

D. EXTRA STOOGES

1. Each player will begin with three Stooges (dependent on option/parameter settings).
2. Extra Stooges are earned by achieving certain score levels (dependent on option/parameter settings).

E. GAME OVER

1. When each player loses his last Stooge, his name with the words Game Over will transfer to the bottom of the screen.

IV. GAME PLAY AND SCORING

HOW TO PLAY

The object of the "Three Stooges" game is to rescue the three brides, Cora, Nora and Dora from the evil Doctor, I.M.Acad M.D.

One, two or three players can choose their favorite Stooge and play either as a team, or against one another. In a one player game the game is played against the computer.

"Three Stooges" consists of seven scenes: (1) The Office; (2) The Parlor; (3) The Kitchen; (4) The Singers; (5) The Art Gallery; (6) The Police Station; and (7) The Laboratory. The players must pick up their respectively colored key in each of the seven scenes, and exit the room. Each scene is repeated in all four levels of difficulty.

The game play starts with all three Stooges in the midst of the first scene, the "Office". With the help of the player controlled joystick, the player searches for a hammer. With the hammer the player can either break furniture to find the keys, or hit the cops and villians which are worth points. The player can also pick up pies, which are located on unbreakable tables and throw them

IV. GAME PLAY AND SCORING

at unsuspecting cops and villians. The player must be careful though, because a pie thrown haphazardly will break windows along the sidewalls encouraging more cops to enter the room.Picking up a pie will also cause the player to lose the hammer.If a player chooses to slap a villian by pressing the slap/throw button on the control panel, the villian will be stunned and if a hammer was being carried, it will be dropped.

Each scene is completed when all three keys are retrieved and the Three Stooges exit the room. All three keys must be picked up to open the exit door.

The players must be very careful during the "Singer" scene.The key for each of the players is located in one of the smaller rooms. When entering the room the player must be quick about retrieving the key because the opera singers "blue note" is lethal.The singers can be silenced by hitting them in the face with a pie.

During the first level of the "Laboratory" scene, there are no brides present. The evil Doctor, I.M.Acad M.D., stands atop the laboratory and as the players pick up their keys the Doctor starts leaving the room. The players must exit in time to capture the Doctor or the round begins over again.

The first of the three brides, Cora, appears at the start of the second level "Laboratory" game. The players must retrieve the keys to change the color of the cage in which Cora is locked. The cage must then be broken with a hammer, Cora rescued, and exit the room.

Nora, the second bride appears during the third "Laboratory" round and Dora, the third bride, appears during the fourth "Laboratory" round.

When Dora has been saved, this will complete the first four levels of the game. The game now repeats the order of the first four levels, with the evil Doctor coming out again in the "Laboratory" scene of level five.

BREAKING WINDOW	=	100 POINTS
VILLIANS		
a. Muffy	=	200 POINTS
b. Beauregard	=	200 POINTS
COPS (Flatfoot)	=	500 POINTS
LOOT		
a. Key	=	500 POINTS
b. Oscar	=	500 POINTS
c. Star	=	500 POINTS
d. Money bag	=	500 POINTS
SCIENTIST	=	500 POINTS
THREE STOOGES		
a. Larry	=	500 POINTS
b. Moe	=	500 POINTS
c. Curly	=	500 POINTS

V. SOUND/SPEECH

SPEECH	OCCURENCE
"Hello"	Moe, Larry or Curly when chosen as a player.
"Oh a wise guy, huh"	Moe, Larry or Curly when contacted.
"Cheese it boys, it's the cops"	Moe, when cops enter room.
"Ow"	Moe, when hit with hammer or slapped.
"Spread Out"	Moe, when contacted.
"What's the matter, knucklehead"	Moe, when contacted.
"AAAHHH"	Larry, when contacted.
"Hey, watch out"	Larry, when contacted.
"YAK, YAK, YAK"	Curly, when contacted.
"NAYAUGH, NAYAUGH, NAYAUGH"	Curly, when contacted.
"Oh, look at the grouse"	Curly, during break screen (4th level).

VI. GAME ADJUSTMENTS/OPTIONS

A. CONTROL BOARD SWITCH ADJUSTMENTS

SWITCH 1 — LIVES PER GAME

OFF	3 LIVES
ON	5 LIVES

SWITCH 2 — ATTRACT PLAY

OFF	SOUND
ON	NO SOUND

SWITCHES 3 & 4 — COIN/CREDITS

3	4	
OFF	OFF	1/1
ON	OFF	1/2
OFF	ON	2/1
ON	ON	FREE PLAY

SWITCH 5 — NOT USED

OFF	
ON	

SWITCH 6 — DIFFICULTY CONTROL

OFF	NORMAL
ON	HARD

SWITCHES 7 & 8 — EXTRA LIVES

7	8	FIRST EXTRA LIFE	EACH ADDITIONAL LIFE
ON	ON	10,000 POINTS	EVERY 10,000 POINTS
ON	OFF	10,000 POINTS	EVERY 20,000 POINTS
OFF	ON	20,000 POINTS	EVERY 10,000 POINTS
OFF	OFF	20,000 POINTS	EVERY 20,000 POINTS

B. SOUND ADJUSTMENTS

The audio output is controlled by the potentiometer mounted on the service panel assembly (located inside the coin mechanism door).

Turning the potentiometer counter-clockwise will decrease the volume. Turning it clockwise will increase the volume.

C. MONITOR ADJUSTMENTS

Normally, few if any adjustments are required for proper monitor operation. However, after any major repairs to the monitor chassis refer to the attached monitor manual.

VII. BOOKKEEPING AND SELF TEST

SELF TEST

The battery back-up bookkeeping functions of this game are contained in Self Test steps 3 and 4. These are in addition to the electro-mechanical coin counter located inside the front door panel. Every time a coin is inserted into a coin slot, the counter is energized, incrementing the count.

The self-test consists of six functions which may be used to identify problems in the video system and to change program parameters.

The self-test mode is entered by setting the self-test toggle switch located inside the cash door to "TEST". A selection of available tests is displayed on the monitor. To return to the GAME mode at any time, the operator needs only to set the toggle switch back to "GAME".

Selection of tests is done with the push button switch labled "SELECT". Upon entering the test mode, a flashing arrow points to the first test selection. Momentarily depressing the "SELECT" button will advance through each selection one by one.

When the arrow is pointing to the desired test, the operator may begin that test by pressing the "SELECT" button and holding it down until the test appears on the screen.

Once a test has been selected, the operator can return to the selection list by holding down the select switch until it re-appears. The six tests are as follows:

1. MONITOR ADJUSTMENT

Four patterns can be displayed on the screen for adjusting monitor color, brightness, contrast and convergence. The patterns are: Color bars, a cross-hatch, a gray scale, and a dot pattern. By momentarily pressing the select switch, the operator may cycle through the four patterns.

2. MEMORY TEST

For each RAM memory chip: An OK or an NG (no good) appears signaling that the chip is good or bad respectively.

Check sums are displayed for each ROM memory chip. If you have a suspect ROM, refer to your distributor for the correct check sum number.

3. SOUND/SPEECH TEST

After selecting this test, a count will appear on the screen, representing the various sounds that are produced by the game. All the different game sounds will be produced and the screen count will repeat to 01. Pressing the MOE button will suppress all sound output and speed up the count so a particular sound can be sought out and checked.

4. BOOKKEEPING

Selecting this test will display a menu of four functions. Pushing the SELECT button momentarily will move an arrow on the screen. When the arrow points to the desired function, press the MOE button on the control panel to perform that function.

DISPLAY SCORE COUNTS — A table is shown with 20 categories of score values by thousands (K) and a count associated with each category. The count represents the number of plays in which the score at the end of the game fell into that category. In addition, a high score, low score, and average is shown along with the total number of plays on which the average is based. To clear the table, press the MOE button and return to the menu by holding down SELECT.

DISPLAY TIME COUNTS — Same as above except each category represents play times in seconds. The high, low, and average are given in minutes and seconds.

DISPLAY ROUND COUNTS — Same as above except each category represents the round in which the games ended.

Note: Each of these tables are independent of the others. Any table may be cleared without affecting the others in any way.

RESET HIGH SCORE - Pressing the MOE button will reset the Top Bananas table (all-time high scores).

VII. BOOKKEEPING AND SELF TEST

5. DIP SWITCHES

A functional description of the eight Dip Switches located on the Logic Board Assy. is displayed. Changing any switch will cause an immediate update of the description displayed on the screen.

6. SWITCH TEST

Pressing any player button, coin switch or moving the joysticks in any direction will display an OK for each switch closure.

VIII. GENERAL INFORMATION

A. PRINTED CIRCUIT BOARDS ARE DESIGNATED AS FOLLOWS:

A1 Logic Board Assy.

A3 Power Supply Assy.

A6 Sound Board Assy.

A7 Diode Board

A8 Filter Board

B. WIRE COLORS ARE SHOWN AS NUMBERS:

0 Black	5 Green
1 Brown	6 Blue
2 Red	7 Purple
3 Orange	8 Gray
4 Yellow	9 White

For example, 688 is a Blue - Gray - Gray striped wire.

C. FUSES

BOTTOM PANEL

F1	115V AC 60 Hz (Primary Power)	3 Amp SLO-BLO
F2	6.3V AC (Coin Chute Lamps)	1 Amp SLO-BLO
F3	Monitor	2 Amp SLO-BLO
F4	9V AC (+5V DC)	12 Amp SLO-BLO
F5	15V AC (+12V DC, -12V DC)	2 Amp SLO-BLO
F6	15V AC (+20V DC)	2 Amp SLO-BLO
F7	Audio Amplifier Supply	1.5 Amp SLO-BLO
F8	9V AC ($\overline{\text{RESET}}$)	1/4 Amp SLO-BLO

VIII. GENERAL INFORMATION

POWER SUPPLY SPECIFICATIONS

LOCATION	VOLTAGE	PROTECTION
Logic Board Assy. (A1)	+5V DC	Voltage adjustable. 6 Amps over-voltage protection and fused for over-current protection.
Sound Board. (A6)	+12V DC -12V DC	1.5 Amp fused for over-current protection. The plus and minus 12 volt supplies use the LM340K-12 and LM320T-12 IC regulators respectively.
Coin Meter	+20V DC	Full wave rectified unfiltered voltage, 1.5 Amp fused for over-current protection.
Coin Chute Lights	6.3V AC	AC voltage, 1 amp fused for over-current protection.
Monitor and Marquee	100V AC or 115V AC, 60HZ	Isolated, fused AC voltage.

WARNING: The Shield Top covering the Master Electronics Panel will have to be removed in order to make some adjustments to the printed circuit boards. This cover is used, in part, to comply with the limits for a Class A computing device pursuant to Subpart J of Part 15 of FCC Rules. Failure to replace the Shield Top over the Master Electronics Panel when the game is in operation voids all warranties.

IX. THEORY OF OPERATION

INTRODUCTION

The character based graphics system designated GG-III has two main subdivisions. The first subdivision is the Central Processor Unit (CPU) which has three partitions:

a. Microprocessors
b. Memory
c. Input and Output ports (I/O)

The Intel 8088 microprocessor is used and 32K bytes of memory is reserved for programming space and has 5 input ports and 5 output ports. The second subdivision is the video state machine which generates and controls the video signal to the monitor. The state machine has three partitions:

a. System Clock (CLK)
b. Foreground generator (FGND)
c. Background generator (BGND)

The system clock is driven by a 20MHZ crystal, divided down for a 5MHZ dot clock.

All inputs and outputs including the video control and general purpose I/O are memory-mapped, (i.e. everything within the system can be addressed in a single segment of 64K addresses as memory).

The video control unit is divided into an "object-oriented" foreground driver and "character-oriented" background driver. The screen resolution is 256 pixels horizontally, and 240 lines vertically for both foreground and background. The CPU communicates with the foreground driver and background driver by writing data into the designated memory areas in a certain format. The foreground is designed to display moving objects on the screen with a minimum overhead to the processor. The game programs will only have to specify the vertical and horizontal position and the object select number to the foreground driver. The background video supplements the foreground with relatively static figures on the screen. The CPU specifies all the character positions on the screen with desired "character " patterns.

A 5MHZ system clock drives a 9 bit horizontal dot counter and an 8 bit vertical line counter. The horizontal counter counts from 0 to 255 during active scan line and 256 to 317 during horizontal blanking time. When the horizontal counter reaches 317, the horizontal counter resets to 0. At the beginning of the horizontal blanking time (horizontal counter = 256) it increments the vertical counter. The vertical counter counts from 0 to 239 during active vertical scan time and 240 to 255 during vertical blanking time.

The battery backup system supports two battery RAM's that store all of the bookkeeping functions. The battery is maintained at a +3.6V reference by a trickle charge supplied on the logic board regulated by a current limiting resistor. If the AC power to the game is interrupted, the battery allows the RAM's to store the data contained in the Distrubutors table and the Options/Parameters screen.

X. WIRING AND SCHEMATIC DIAGRAMS, PARTS LISTS

TABLE OF CONTENTS

PAGE

LOGIC BOARD ASSY. (A1)
- COMPONENT LOCATION AND PARTS LIST 13
- SCHEMATIC DIAGRAM (SHEET 1 OF 3) 16
- SCHEMATIC DIAGRAM (SHEET 2 OF 3) 18
- SCHEMATIC DIAGRAM (SHEET 3 OF 3) 21

POWER SUPPLY ASSY. (A3)
- COMPONENT LOCATION AND PARTS LIST 24
- SCHEMATIC DIAGRAM 25

SOUND BOARD ASSY. (A6)
- COMPONENT LOCATION AND PARTS LIST 27
- SCHEMATIC DIAGRAM 28

PRIMARY POWER/FILTER BOARD/ INTERCONNECTION DIAGRAM 30

LOGIC BOARD ASSY. (A1), PARTS LIST

MISCELLANEOUS ELECTRONIC COMPONENTS

REFERENCE	DESCRIPTION	PART NO.
Bat 1	Battery, 3.6V	XO-458
C1-C16	Capacitor, 0.1 UF 50V AX CR +80%-20%	XO-230
C25	Capacitor, 100 UF, 25V EL-AX	XO-212
C26	Capacitor, 0.1 UF, 50V AX CR +80%-20%	XO-230
C27	Capacitor, 100 UF, 25V EL-AX	XO-212
C31-34	Capacitor, 0.1 UF, 50V AX CR +80%-20%	XO-230
C51	Capacitor, 100 PF, 100V CMD 5%	XO-198
C52	Capacitor, 0.1 UF, 100V CMD 5%	XO-196
C53	Capacitor, 10 UF, 25V AX TANT 10%	XO-127
ALL UNMARKED CAPACITORS	.01 UF, 50V AX CR +80%-20%	XO-229
ALL POLARIZED UNMARKED CAPACITORS	10 UF, 25V AX TANT 10%	XO-127
D2	Diode, 1N4454	XO-275
D4	Diode, 1N4733A	XO-274
D81	Diode, 1N4148	XO-261
Q1	Transistor, MPS-U45	XO-306
Q2-Q4	Transistor, 2N6044	XO-120
Q81-Q87	Transistor, MPSA70	XO-309
R1-R16	Resistor, 470 OHM, 5% ¼W	XO-35
R25	Resistor, 1K OHM, 5% ¼W	XO-5
R31	Resistor, 10K OHM, 5% ¼W	XO-18
R32-R34	Resistor, 1K OHM, 5% ¼W	XO-5
R37, R38	Resistor, 330 OHM, 5% ¼W	XO-34
R39	Resistor, 130 OHM, 5% ¼W	XO-172
R40	Resistor, 270 OHM, 5% ¼W	XO-68
R41, R42	Resistor, 510 OHM, 5% ¼W	XO-25
R43	Resistor, 130 OHM, 5% ¼W	XO-172
R44, R45	Resistor, 1K OHM, 5% ¼W	XO-5
R51, R52	Resistor, 330 OHM, 5% ¼W	XO-34
R53, R54, R56	Resistor, 1K OHM, 5% ¼W	XO-5
R57, R58	Resistor, 560 OHM, 5% ¼W	XO-36
R59-R61	Resistor, 1K OHM, 5% ¼W	XO-5
R63, R64	Resistor, 1K OHM, 5% ¼W	XO-5
R70	Resistor, 1K OHM, 5% ¼W	XO-5
R73, R74	Resistor, 1K OHM, 5% ¼W	XO-5
R76-R80	Resistor, 1K OHM, 5% ¼W	XO-5
R81	Resistor, 820 OHM, 5% ¼W	XO-174
R82	Resistor, 100 OHM, 5% ¼W	XO-28
R83, R84	Resistor, 15 OHM, 5% ¼W	XO-171
R85	Resistor, 180 OHM, 5% ¼W	XO-24
R86, R87	Resistor, 15 OHM, 5% ¼W	XO-171
R88	Resistor, 180 OHM, 5% ¼W	XO-24
R89, R90	Resistor, 15 OHM, 5% ¼W	XO-171
R91	Resistor, 180 OHM, 5% ¼W	XO-24
R92	Resistor, 1K OHM, 5% ¼W	XO-5
R93	Resistor, 2K OHM, 5% ¼W	XO-14
R94	Resistor, 1K OHM, 5% ¼W	XO-5
R95	Resistor, 470 OHM, 5% ¼W	XO-35
R96	Resistor, 240 OHM, 5% ¼W	XO-173
R97	Resistor, 2K OHM, 5% ¼W	XO-14
R98	Resistor, 1K OHM, 5% ¼W	XO-5
R99	Resistor, 470 OHM, 5% ¼W	XO-35
R100	Resistor, 240 OHM, 5% ¼W	XO-173
R101	Resistor, 2K OHM, 5% ¼W	XO-14
R102	Resistor, 1K OHM, 5% ¼W	XO-5
R103	Resistor, 470 OHM, 5% ¼W	XO-35
R104	Resistor, 240 OHM, 5% ¼W	XO-173
SIP 1, SIP 2, SIP 4	Resistor, Dip, 4.7K, 9 Pin	XO-492
SIP 71, SIP 72, SIP 73	Resistor, Dip, 1K, 9 Pin	XO-493
X-TAL 41	Crystal, 15 MHZ	XO-482
XTAL 51	Crystal 20 MHZ	XO-494
	Dip Switch	XO-505
	20 Pin Dip Socket	XO-491
	22 Pin Dip Socket	XO-467
	24 Pin Dip Socket	XO-529
	28 Pin Dip Socket	XO-536
	40 Pin Dip Socket	XO-530

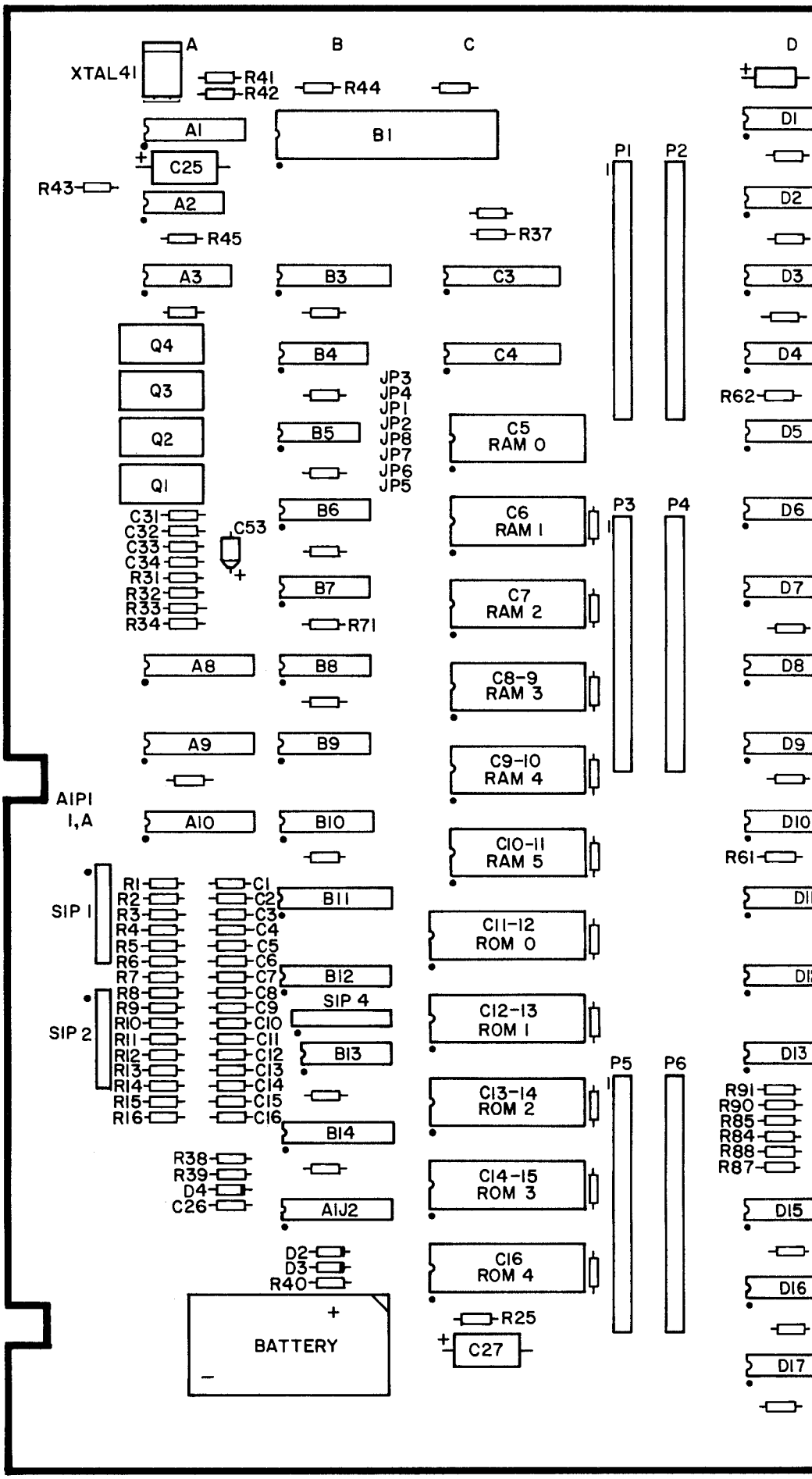

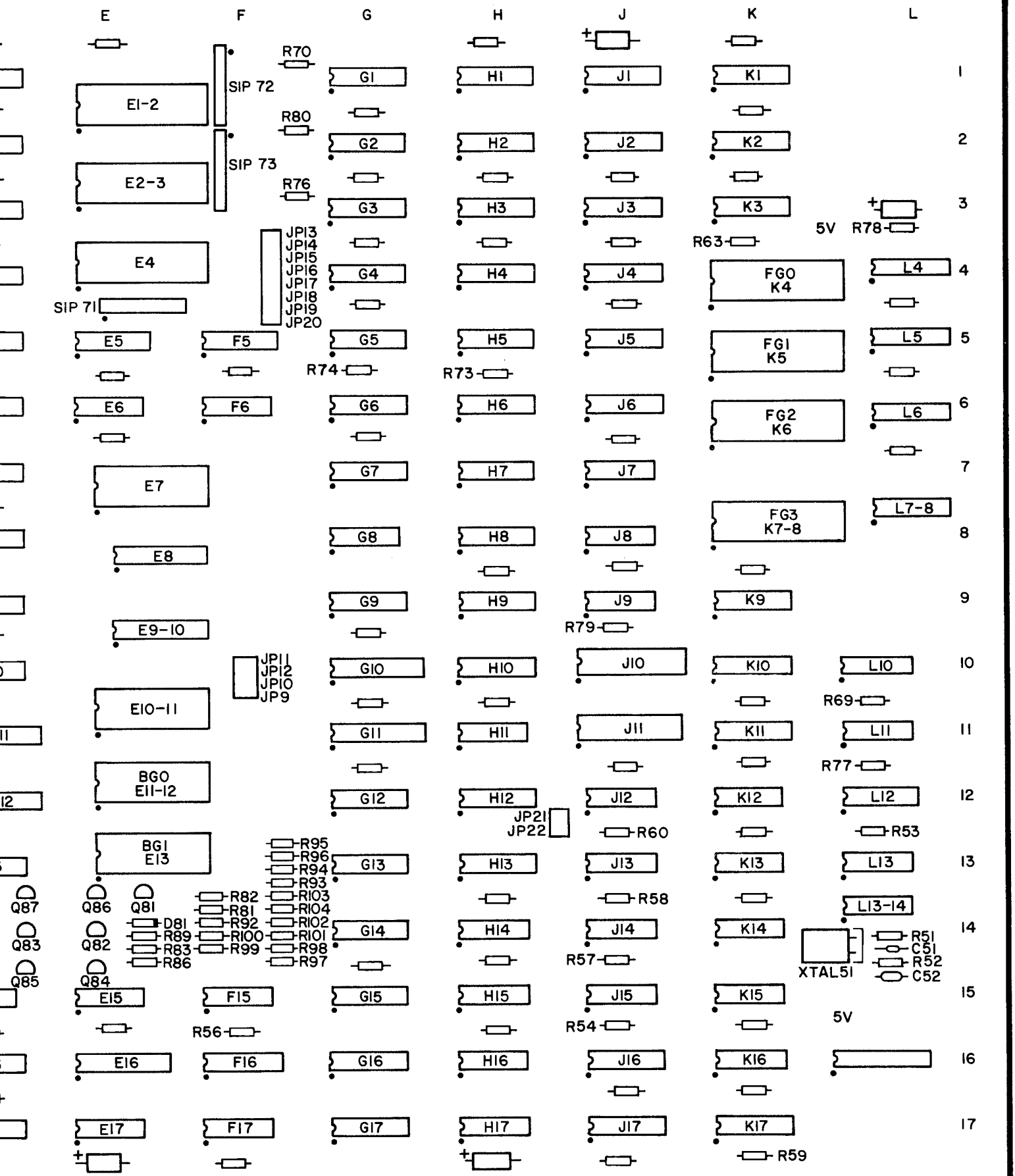
E
F
G
H
J
K
L
1
2
3
4
5
6
7
8
9
10
11
12
13
14
15
16
17
E1-2
E2-3
E4
E5
E6
E7
E8
E9-10
E10-11
BG0 E11-12
BG1 E13
E15
E16
E17
F5
F6
F15
F16
F17
G1
G2
G3
G4
G5
G6
G7
G8
G9
G10
G11
G12
G13
G14
G15
G16
G17
H1
H2
H3
H4
H5
H6
H7
H8
H9
H10
H11
H12
H13
H14
H15
H16
H17
J1
J2
J3
J4
J5
J6
J7
J8
J9
J10
J11
J12
J13
J14
J15
J16
J17
K1
K2
K3
FG0 K4
FG1 K5
FG2 K6
FG3 K7-8
K9
K10
K11
K12
K13
K14
K15
K16
K17
L4
L5
L6
L7-8
L10
L11
L12
L13
L13-14
SIP 72
SIP 73
SIP 71
JP13
JP14
JP15
JP16
JP17
JP18
JP19
JP20
JP11
JP12
JP10
JP9
JP21
JP22
R70
R80
R76
R74
R73
R79
R60
R58
R57
R54
R56
R63
R78
R69
R77
R53
R59
R95
R96
R94
R93
R82
R81
R92
R100
R99
R103
R104
R102
R101
R98
R97
R86
R89
R83
D81
Q87
Q86
Q81
Q83
Q82
Q85
Q84
5V
XTAL51
R51
C51
R52
C52

LOGIC BOARD ASSY. (A1), PARTS LIST (CONT.)

INTEGRATED CIRCUITS

REFERENCE	DESCRIPTION	PART NO.
	Logic Board Assy.	MA-646
A1	8284 CLK Driver	XO-478
A2	74LS02 Quad 2-input "NOR" gate	XO-428
A3	74161 Synchronous 4-bit counter	XO-192
A8, A9, A10	74LS377 Octal "D" Flip Flop	XO-97
B1	8088 CPU	XO-490
B3	74LS373 Octal D-type flip flop	XO-445
B4	74LS367 Hex 3-state buffer	XO-444
B5	74LS08 Quad 2-input "AND" gate	XO-86
B6	74HC138 Decoder/demultiplexer	XO-190
B7	74LS139 Dual 1 of 4 decoder	XO-419
B8	74S138 1 of 8 decoder	XO-113
B9, B10	74LS138 1 of 8 decoder	XO-437
B11, B12, B14	74LS240 Octal Buffer/line driver	XO-91
C3	74LS373 Octal D-type flip flop	XO-445
C4	74LS245 Octal Bus transceiver	XO-79
C5	RAM Ø 6116LP-4	XO-191
C6	RAM 1 6116LP-4	XO-191
C7, C8-9	2128-4, 2Kx8 Static RAM	XO-195
C9-10	ROM B 2732A 4K x 8 EPROM	XO-485
C11-12	ROM Ø 2764 8K x 8 EPROM	XO-489
C12-13	ROM 1 2764 8K x 8 EPROM	XO-489
C13-14	ROM 2 2764 8K x 8 EPROM	XO-489
C14-15	ROM 3 2764 8K x 8 EPROM	XO-489
C16	ROM 4 2764 8K x 8 EPROM	XO-489
D1	74LS139 Dual 1 of 4 Decoder	XO-419
D2, D3, D4, D5, D6, D7, D8, D9,		
D10	74157 Quad 2-input multiplexer	XO-114
D11	74LS374 Octal D-type flip flop	XO-96
D12	74LS244 Octal buffer/line driver	XO-117
D13	74LS157 Quad 2-input multiplexer	XO-390
D15	74LS86 Quad 2-input exclusive "OR" gate	XO-435
D16	74LS283 4-bit binary full adder	XO-95
D17	74S161 Synchronous presettable binary counter	XO-488
E1-2, E2-3, E4	93419 64 x 9 bipolar RAM	XO-99
E5	74LS283 4-bit binary full adder	XO-95
E6	74LS30 8-input "NAND"	XO-432
E7	4801 1K x 8 RAM	XO-193
E8, E9-10	74LS245 Octal Bus Transceiver	XO-79
E10-11	4801 1K x 8 RAM	XO-193
E11-12	2128 (8GØ) RAM	XO-195
E13	2128 (8G1) RAM	XO-195
E15	74LS86 Quad 2-input exclusive "OR" gate	XO-435
E16	74LS273 8-bit register	XO-94
E17	74LS20 Dual 4-input "NAND" gate	XO-430
F5	74LS283 4-bit binary full adder	XO-95
F6	74LS32 Quad 2-input "OR" gate	XO-433
F15	74LS04 Hex inverter	XO-418
F16	74S161 Synchronous presettable binary counter	XO-488
F17	74LS86 Quad 2-input exclusive "OR" gate	XO-435
G1, G2, G3, G4, G5	74LS157 Quad 2-input multiplexer	XO-390
G6	74LS161 Synchronous presettable binary counter	XO-440
G7	74157 Quad 2-input multiplexer	XO-114
G8	74LS74 Dual D-type flip flop	XO-434
G9	74S157 Quad 2-input multiplexer	XO-124
G10	74LS245 Octal bus transceiver	XO-79
G11	74LS374 Octal D-type flip flop	XO-96
G12	74LS157 Quad 2-input multiplexer	XO-390
G13, G14, G15	7489 64-bit RAM	XO-88
G16, G17	74LS174 Hex D flip flop	XO-442
H1, H2, H3, H4	74S189 64-bit RAM	XO-89
H5, H6,	74S161 Synchronous presettable binary counter	XO-488
H7, H8, H9, H10	74LS157 Quad 2-input multiplexer	XO-390
H11	74LS260 Dual 5-input "NOR" gate	XO-93
H12	74LS298 Quad 2-port register	XO-118
H13	74LS157 Quad 2-input multiplexer	XO-390
H14	74LS00 Quad 2-input "NAND" gate	XO-427
H15	74LS30 8 input "NAND" gate	XO-432
H16, H17	74LS86 Dual 2-input exclusive "OR" gate	XO-435
J1, J2, J3, J4, J5, J6	74S189 64-bit RAM	XO-89
J7	74LS04 Hex inverter	XO-418
J8	74LS32 Quad 2-input "OR" gate	XO-433
J9	7408 Quad 2-input "AND" gate	XO-404
J10, J11	93422 256 x 2 bipolar RAM	XO-100
J12	74LS02 Quad 2-input "NOR" gate	XO-428
J13	74LS74 Dual D-type flip flop	XO-434
J14	7407 Hex buffer/driver	XO-384
J15	74LS30 8 input "NAND" gate	XO-432
J16, J17	74S161 Synchronous presettable binary counter	XO-488
K1, K2, K3	74LS379 Quad D-type flip flop	XO-98
K4	FG0 2764-3 8K x 8 EPROM	XO-489
K5	FG1 2764-3 8K x 8 EPROM	XO-489
K6	FG2 2764-3 8K x 8 EPROM	XO-489
K7-8	FG3 2764-3 8K x 8 EPROM	XO-489
K9, K10, K11	74LS157 Quad 2-input multiplexer	XO-390
K12	74LS260 Dual 5-input "NOR" gate	XO-93
K13	74LS32 Quad 2-input "OR" gate	XO-433
K14	74LS08 Quad 2-input "AND" gate	XO-86
K15	74S04 Hex inverter	XO-400
K16	74LS20 Dual 4-input "NAND" gate	XO-430
K17	74S161 Synchronous presettable binary counter	XO-488
L4, L5, L6, L7-8	74LS166 8-bit shift register	XO-391
L10	74LS74 Dual flip flop	XO-434
L11	74LS20 Dual 4-input "NAND" gate	XO-430
L12	74S161 Synchronous presettable binary counter	XO-488
L13	74S74 Dual D-type pos. edge trig. flip flop (T. I. only)	XO-87
L13-14	74S04 Hex inverter	XO-400

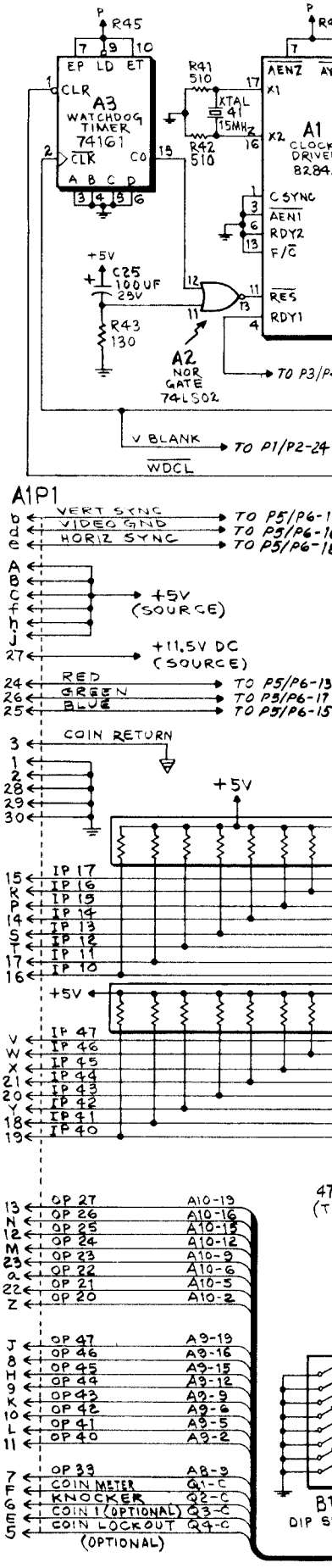

X. WIRING AND SCHEMATIC DIAGRAMS, PARTS LISTS

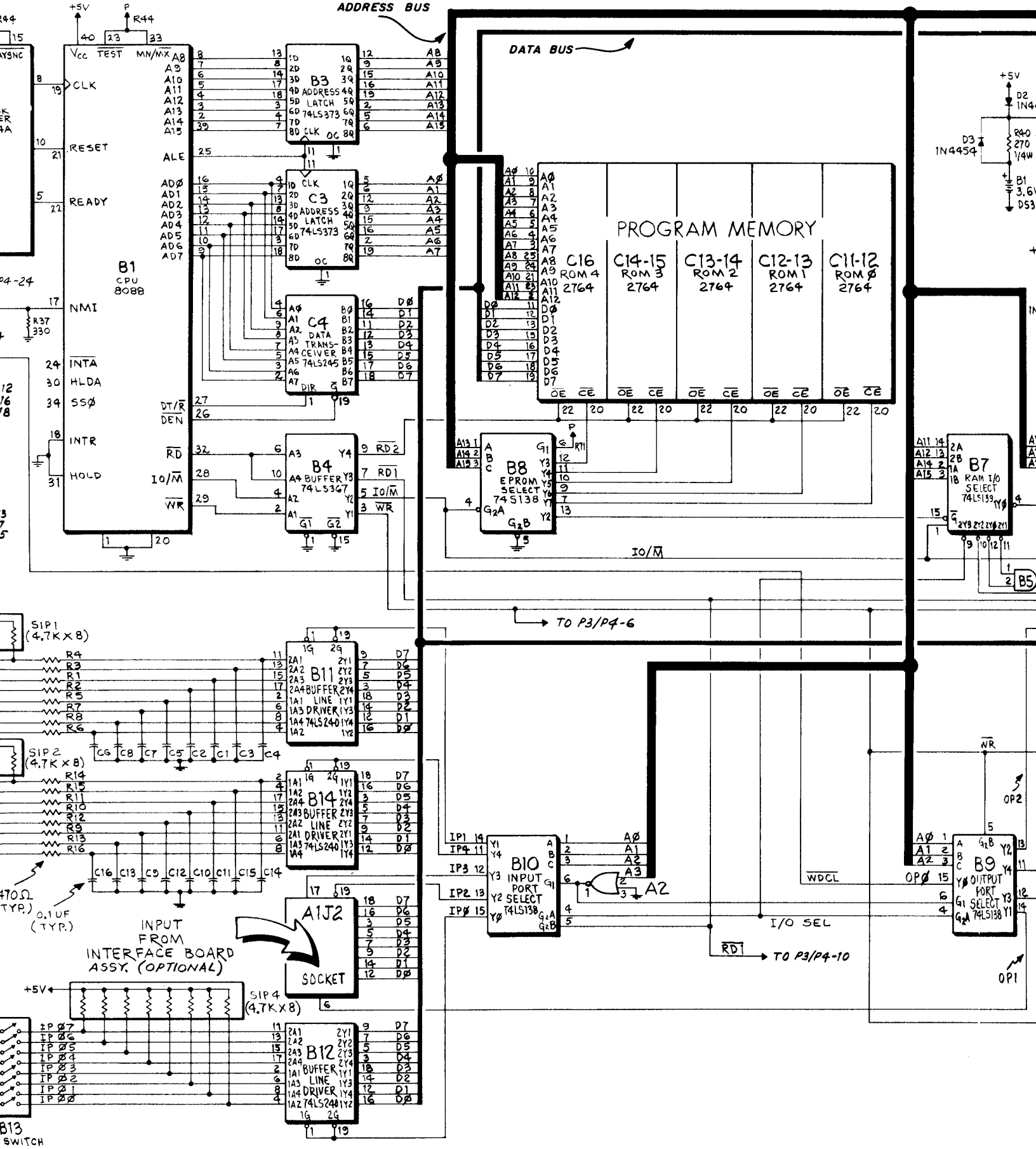

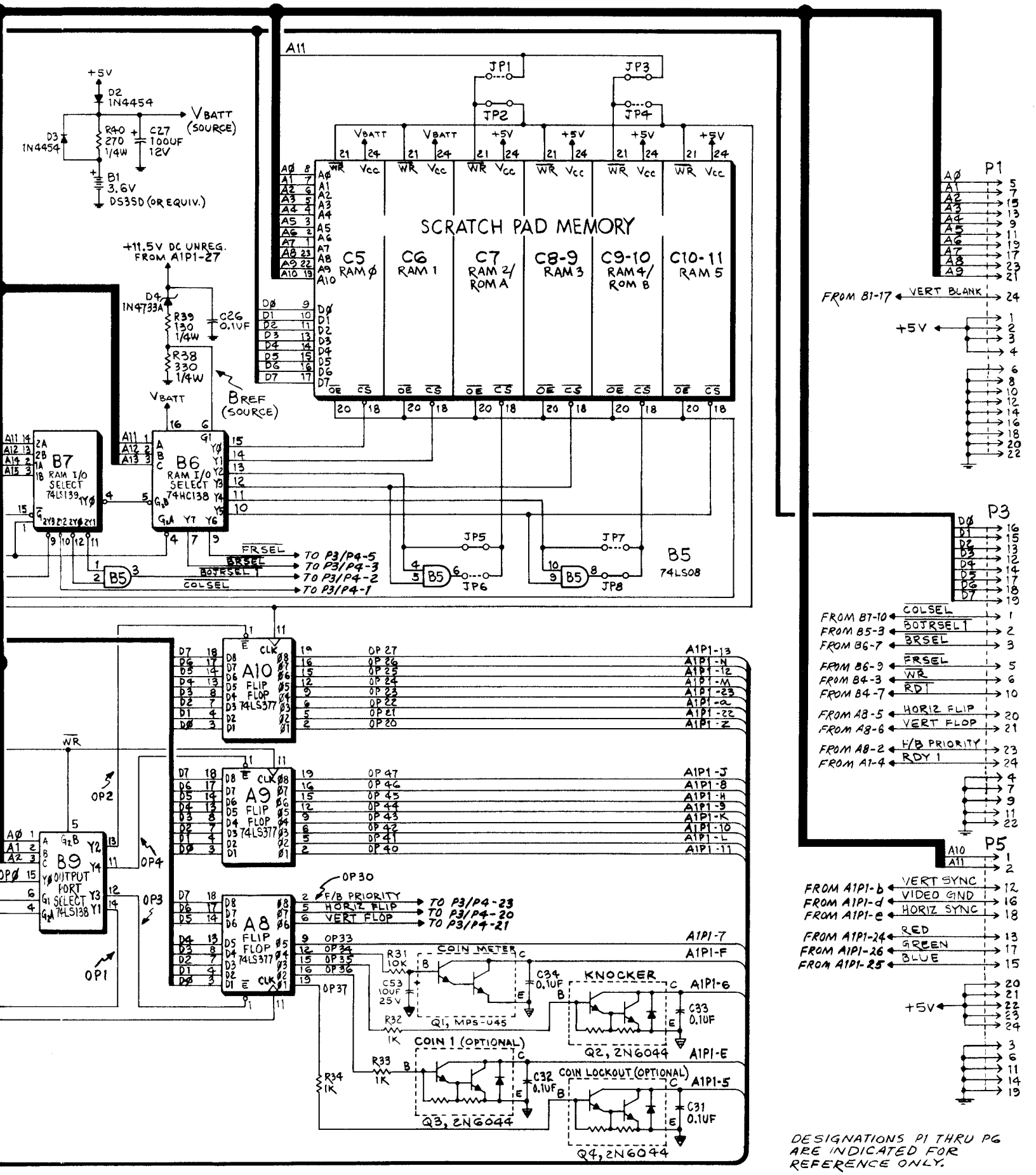

DESIGNATIONS P1 THRU P6 ARE INDICATED FOR REFERENCE ONLY.

LOGIC BOARD ASSY. (A1), SCHEMATIC DIAGRAM, SHEET 1 OF 3

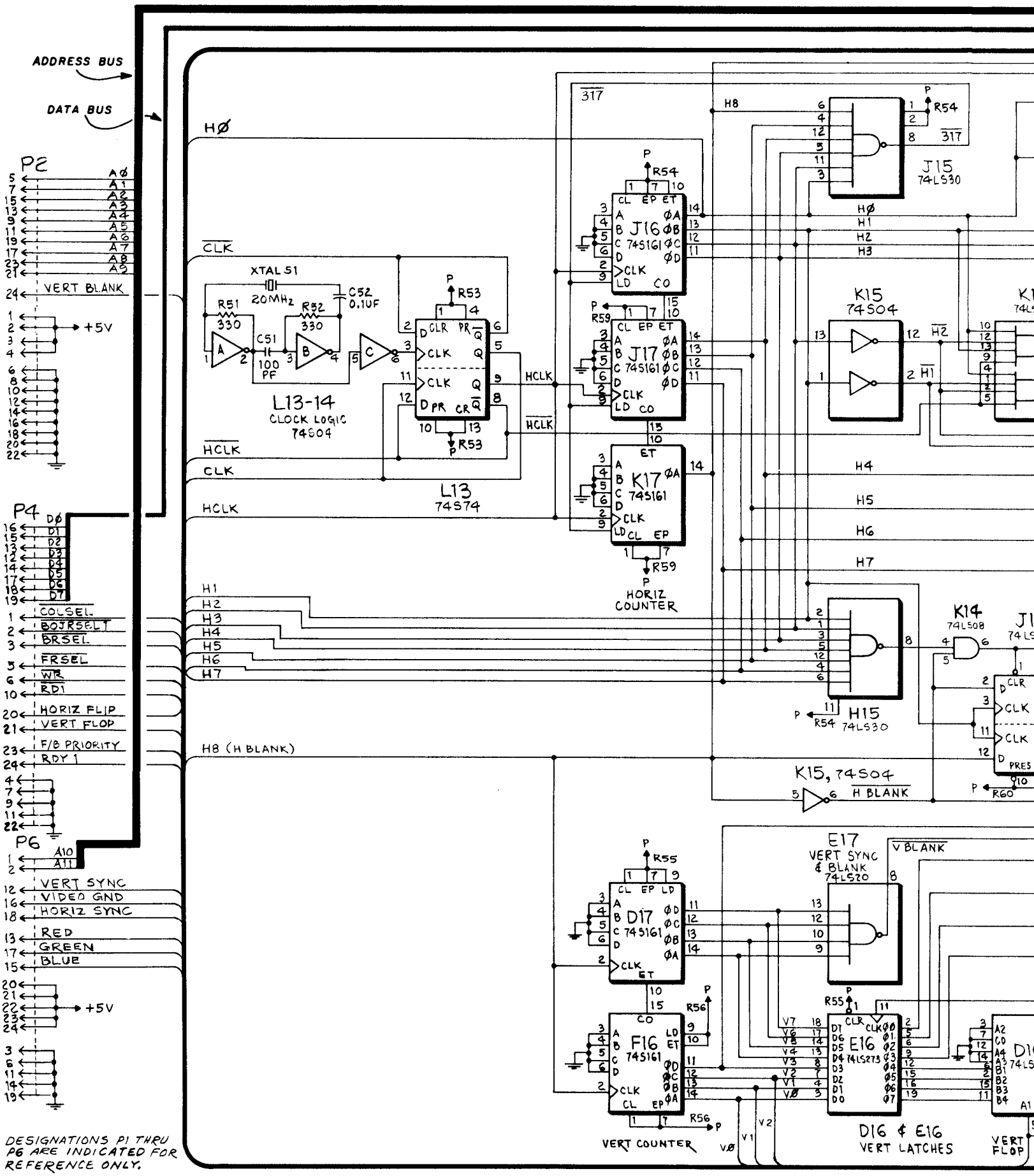
ADDRESS BUS
DATA BUS
P2
VERT BLANK
+5V
P4
COLSEL
BOJRSELT
BRSEL
FRSEL
WR
RD1
HORIZ FLIP
VERT FLOP
F/B PRIORITY
RDY 1
P6
VERT SYNC
VIDEO GND
HORIZ SYNC
RED
GREEN
BLUE
+5V
DESIGNATIONS P1 THRU P6 ARE INDICATED FOR REFERENCE ONLY.
HØ
CLK
HCLK
H1
H2
H3
H4
H5
H6
H7
H8 (H BLANK)
XTAL 51
20MHz
C52 0.1UF
R51 330
R52 330
C51 100 PF
L13-14
CLOCK LOGIC
74S04
L13
74S74
HORIZ COUNTER
J15
74LS30
K15
74S04
K14
74LS08
H15
74LS30
K15, 74S04
H BLANK
E17
VERT SYNC & BLANK
74LS20
V BLANK
VERT COUNTER
D16 & E16
VERT LATCHES
VERT FLOP

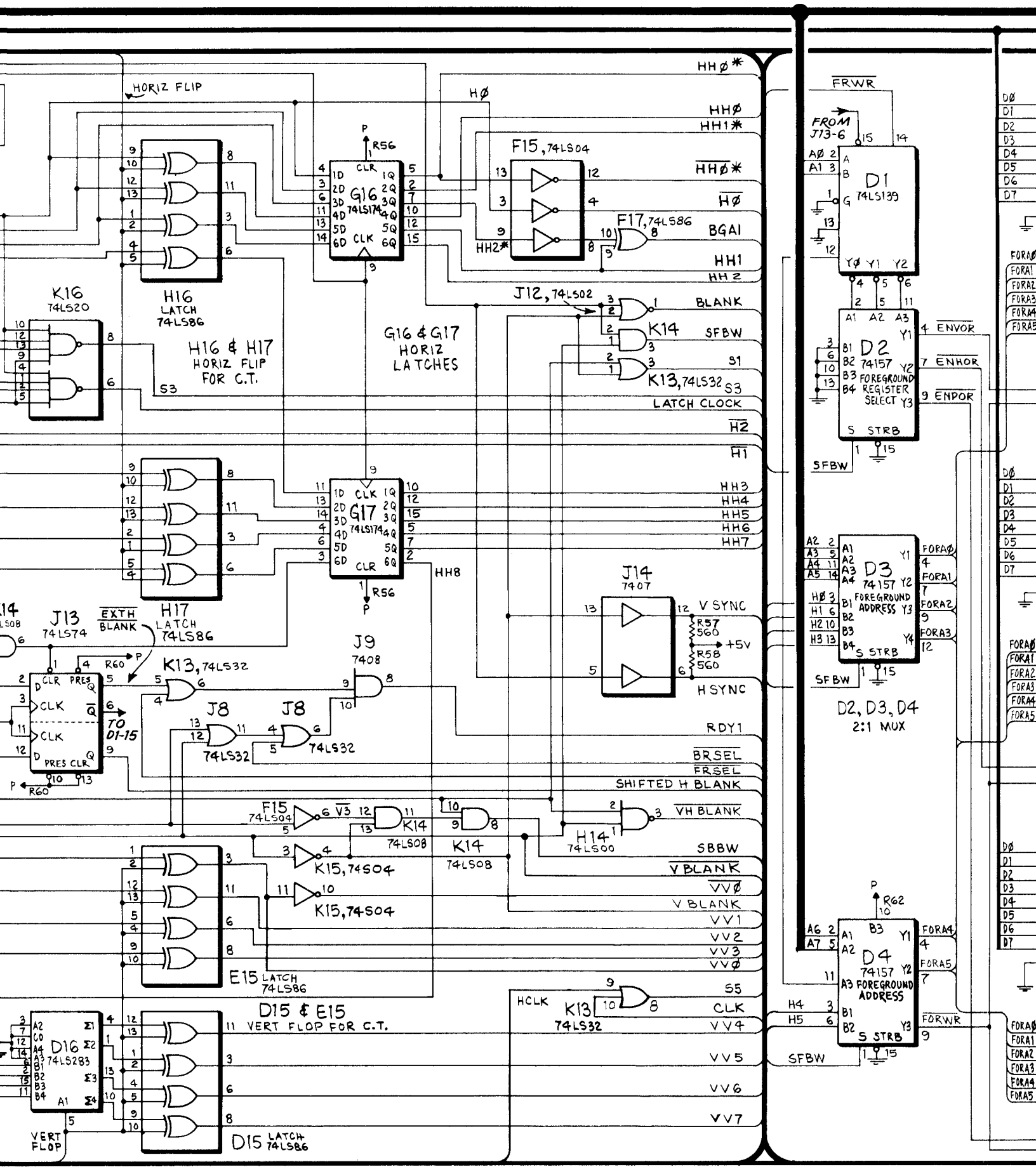
HORIZ FLIP
H16 LATCH 74LS86
H16 & H17 HORIZ FLIP FOR C.T.
G16 & G17 HORIZ LATCHES
G16 74LS174
G17 74LS174
F15, 74LS04
F17, 74LS86
J12, 74LS02
K14
K13, 74LS32
K16 74LS20
H17 LATCH 74LS86
J13 74LS74
EXTH BLANK
J9 7408
J8 74LS32
J14 7407
V SYNC
H SYNC
R57 560
R58 560
+5V
TO D1-15
F15 74LS04
K14 74LS08
K15, 74S04
H14 74LS00
E15 LATCH 74LS86
D15 & E15 VERT FLOP FOR C.T.
D16 74LS283
VERT FLOP
D15 LATCH 74LS86
HCLK
HHØ*
HHØ
HH1*
HHØ*
HØ
BGA1
HH1
HH2
BLANK
SFBW
S1
S3
LATCH CLOCK
H2
H1
HH3
HH4
HH5
HH6
HH7
HH8
RDY1
BRSEL
FRSEL
SHIFTED H BLANK
VH BLANK
SBBW
V BLANK
VVØ
VV1
VV2
VV3
VVØ
S5
CLK
VV4
VV5
VV6
VV7
FRWR
FROM J13-6
D1 74LS139
D2 74157 FOREGROUND REGISTER SELECT
ENVOR
ENHOR
ENPOR
D3 74157 FOREGROUND ADDRESS
D2, D3, D4 2:1 MUX
D4 74157 FOREGROUND ADDRESS
FORAØ
FORA1
FORA2
FORA3
FORA4
FORA5
FORWR
SFBW

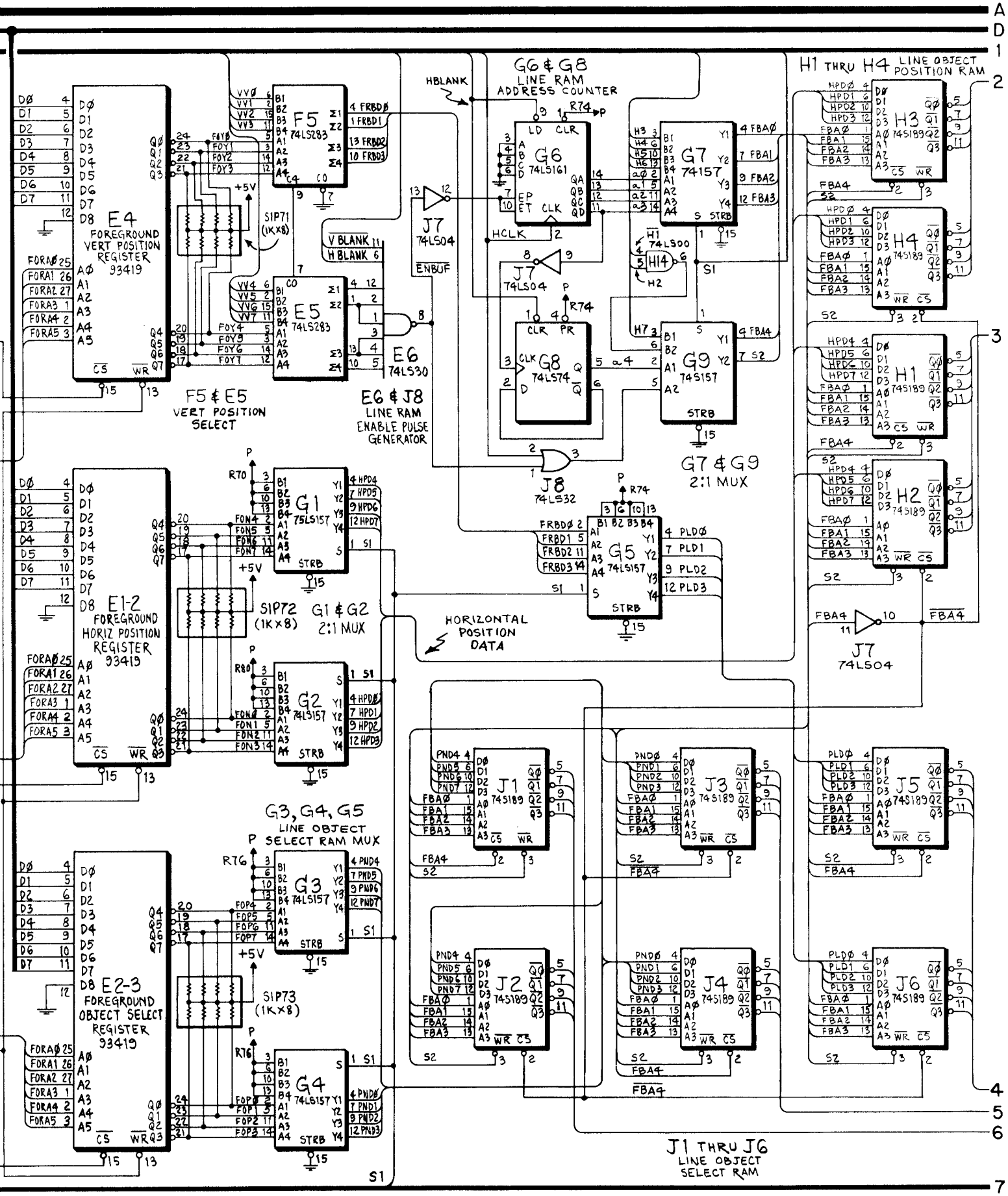

LOGIC BOARD ASSY. (A1), SCHEMATIC DIAGRAM, SHEET 2 OF 3

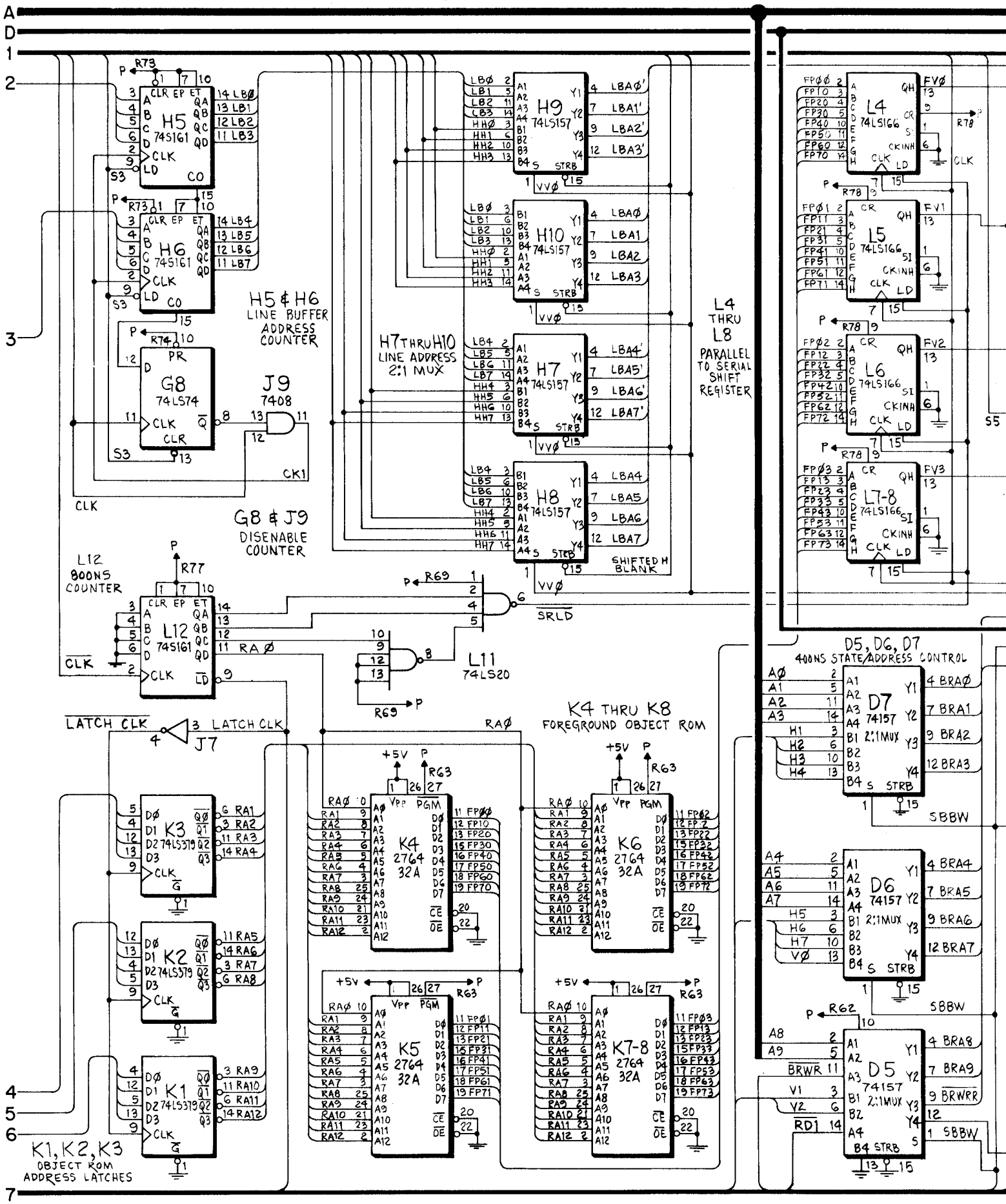
H5 & H6
LINE BUFFER
ADDRESS
COUNTER
H7 THRU H10
LINE ADDRESS
2:1 MUX
L4
THRU
L8
PARALLEL
TO SERIAL
SHIFT
REGISTER
G8 & J9
DISENABLE
COUNTER
L12
800NS
COUNTER
L11
74LS20
SHIFTED H
BLANK
SRLD
LATCH CLK
J7
K4 THRU K8
FOREGROUND OBJECT ROM
D5, D6, D7
400NS STATE/ADDRESS CONTROL
K1, K2, K3
OBJECT ROM
ADDRESS LATCHES
SBBW

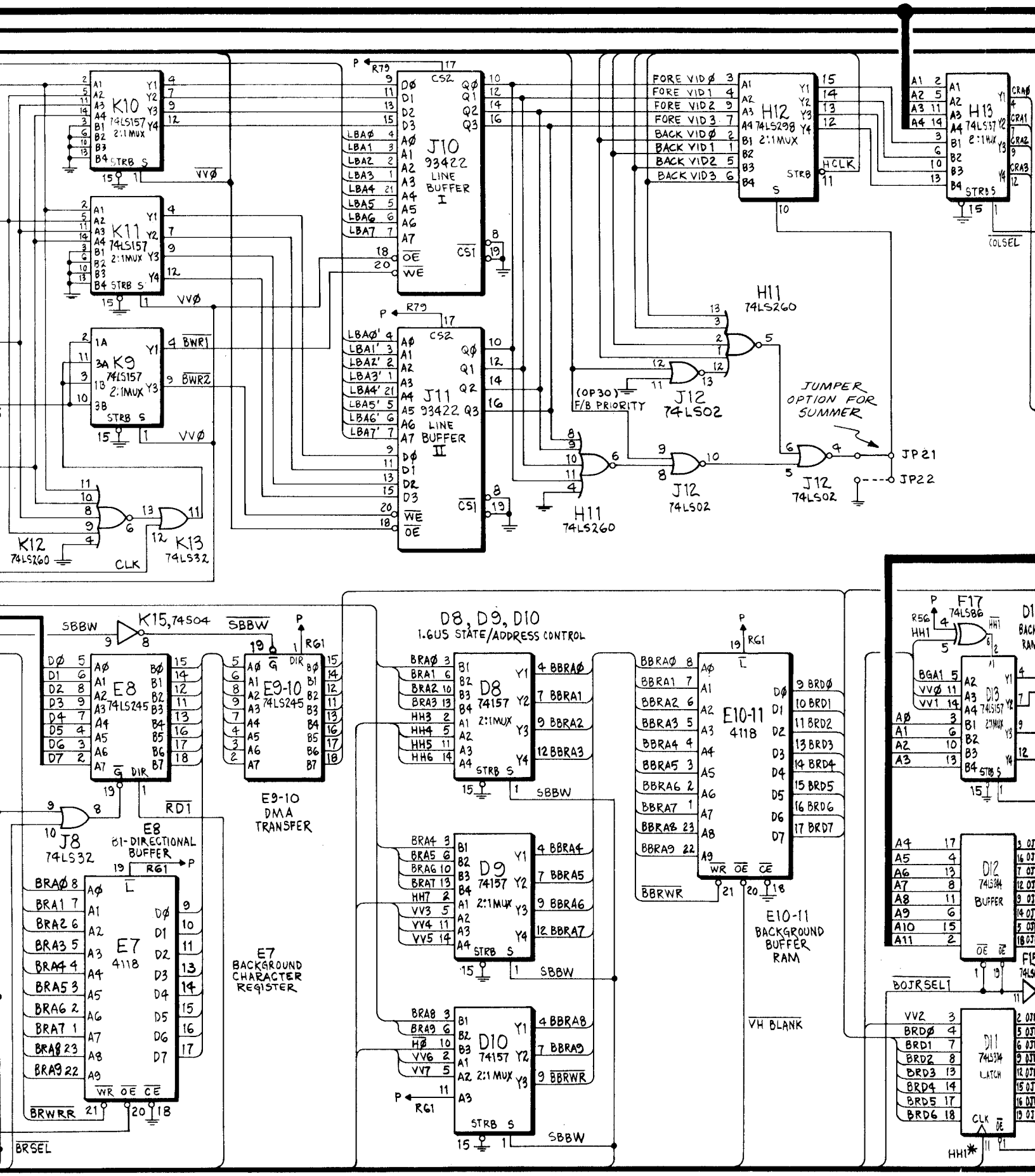
K10 74LS157 2:1MUX
K11 74LS157 2:1MUX
K9 74LS157 2:1MUX
K12 74LS260
K13 74LS32
J10 93422 LINE BUFFER I
J11 93422 LINE BUFFER II
H12 74LS298 2:1MUX
H13 74LS157 2:1MUX
H11 74LS260
J12 74LS02
FORE VID Ø
FORE VID 1
FORE VID 2
FORE VID 3
BACK VID Ø
BACK VID 1
BACK VID 2
BACK VID 3
HCLK
COLSEL
(OP30) F/B PRIORITY
JUMPER OPTION FOR SUMMER
JP21
JP22
VVØ
BWR1
BWR2
CLK
K15,74S04
SBBW
E8 74LS245
E9-10 74LS245
E9-10 DMA TRANSFER
RD1
J8 74LS32
E8 BI-DIRECTIONAL BUFFER
E7 4118
E7 BACKGROUND CHARACTER REGISTER
BRWRR
BRSEL
D8, D9, D10 1.6US STATE/ADDRESS CONTROL
D8 74157 2:1MUX
D9 74157 2:1MUX
D10 74157 2:1MUX
E10-11 4118
E10-11 BACKGROUND BUFFER RAM
BBRWR
VH BLANK
F17 74LS86
D13 74LS157 2:1MUX
D12 74LS244 BUFFER
D11 74LS374 LATCH
BOJRSEL1
HH1*

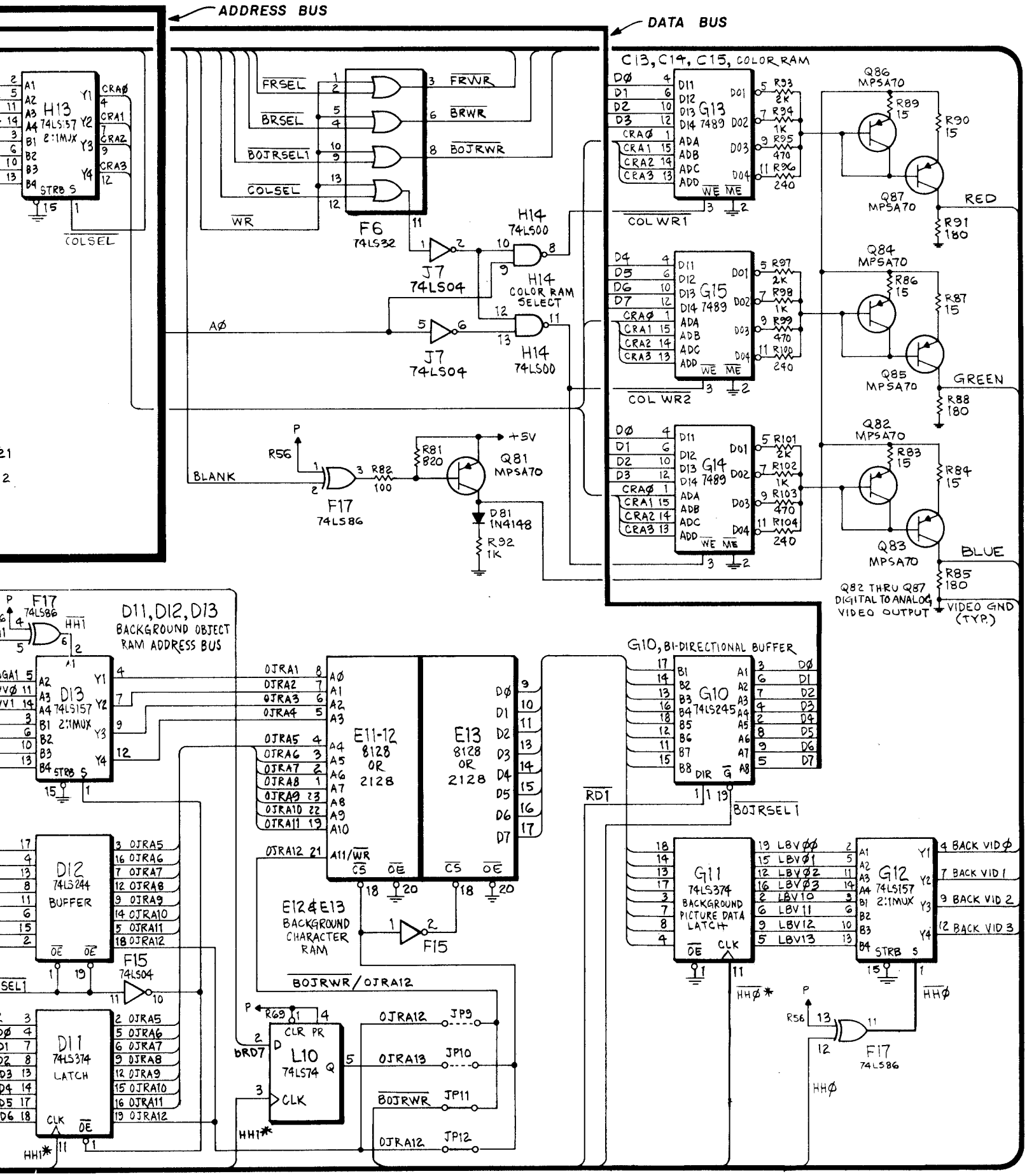

LOGIC BOARD ASSY. (A1), SCHEMATIC DIAGRAM, SHEET 3 OF 3

X. WIRING AND SCHEMATIC DIAGRAMS, PARTS LISTS

POWER SUPPLY ASSY. (A3), COMPONENT LOCATION

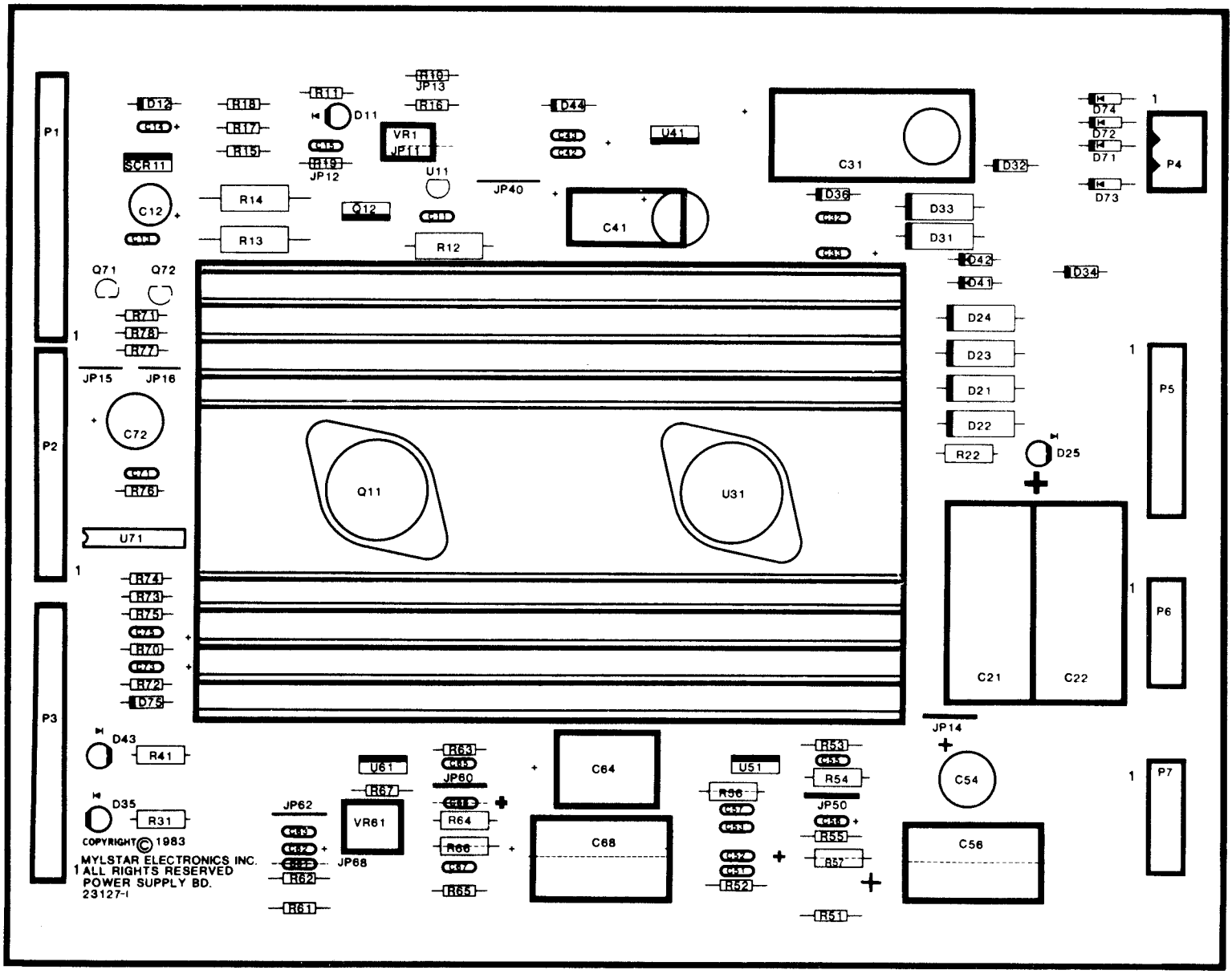

POWER SUPPLY ASSY. (A3), PARTS LIST

REFERENCE	DESCRIPTION	PART NO.
	Power Supply Assembly	MA-479
C11, C32, C42, C55, C71	Capacitor, .01UF, 50V	XO-229
C12	Capacitor, 100UF, 16V	XO-235
C13, C57	Capacitor, .1UF, 50V	XO-558
C14, C33, C43	Capacitor, .22UF, 35V	XO-615
C21	Capacitor, 2200UF, 25V	XO-346
C31	Capacitor, 1500UF, 35V	XO-616
C41, C54, C72	Capacitor, 470UF, 35V	XO-284
C52, C56	Capacitor, 1UF, 35V	XO-715
C58	Capacitor, 1000UF, 25V	XO-218
C73, C75	Capacitor, .1UF, 35V	XO-614
D11, D25, D35, D43	Diode, Light Emitting MV-5752	XO-270
D12	Diode, Zener, 5.6V, 1N4734A	XO-255
D21-D24, D31, D33	Diode, 1N5401	XO-263
D32, D34, D36, D41, D42, D44	Diode, 1N4004	XO-254
D71-D75	Diode, 1N4148	XO-261
Q11	Transistor, PNP, 2N5879	XO-323
Q12	Transistor, TIP31B	XO-641
Q71	Transistor, PNP, 2N3906	X0-588
Q72	Transistor, NPN, 2N3904	XO-549
R11, R16	Resistor, 180 OHM, 5%, ¼W	XO-24
R12	Resistor, 100 OHM, 5%, 1W	XO-137
R13, R14	Resistor, 12 OHM, 5%, 3W	XO-138
R15	Resistor, 200 OHM, 5%, ¼W	XO-143
R17, R52, R53	Resistor, 100 OHM, 5%, ¼W	XO-28
R18	Resistor, 20 OHM, 5%, ¼W	XO-29
R22	Resistor, 470 OHM, 5%, ½W	XO-55
R31, R41	Resistor, 560 OHM, 5%, ¼W	XO-36
R51	Resistor, 51.1K OHM, 5%, ¼W	XO-40
R54	Resistor, 220 OHM, 5%, ½W	XO-185
R55	Resistor, 2.2 OHM, 5%, ¼W	XO-595
R56	Resistor, 1 OHM, 5%, ½W	XO-593
R70	Resistor, 1K OHM, 5%, ¼W	XO-5
R71, R73, R77	Resistor, 10K OHM, 5%, ¼W	XO-18
R72	Resistor, 110K OHM, 5%, ¼W	XO-591
R74	Resistor, 560K OHM, 5%, ¼W	XO-704
R75	Resistor, 2K OHM, 5%, ¼W	XO-14
R76	Resistor, 4.7K OHM, 5%, ¼W	XO-7
R78	Resistor, 100 OHM, 5%, ½W	XO-52
SCR68-1	Silicon Controlled Rectifier	XO-131
U11	Voltage Regulator, Zener TL431	X0-272
U31	Voltage Regulator, -12V, LM340K	X0-628
U41	Voltage Regulator, -12V, LM320T	X0-613
U51	Audio Amplifier, LM200T	X0-550
U71	IC, CMOS	X0-564
VR1	Potentiometer, 100 OHM	X0-134

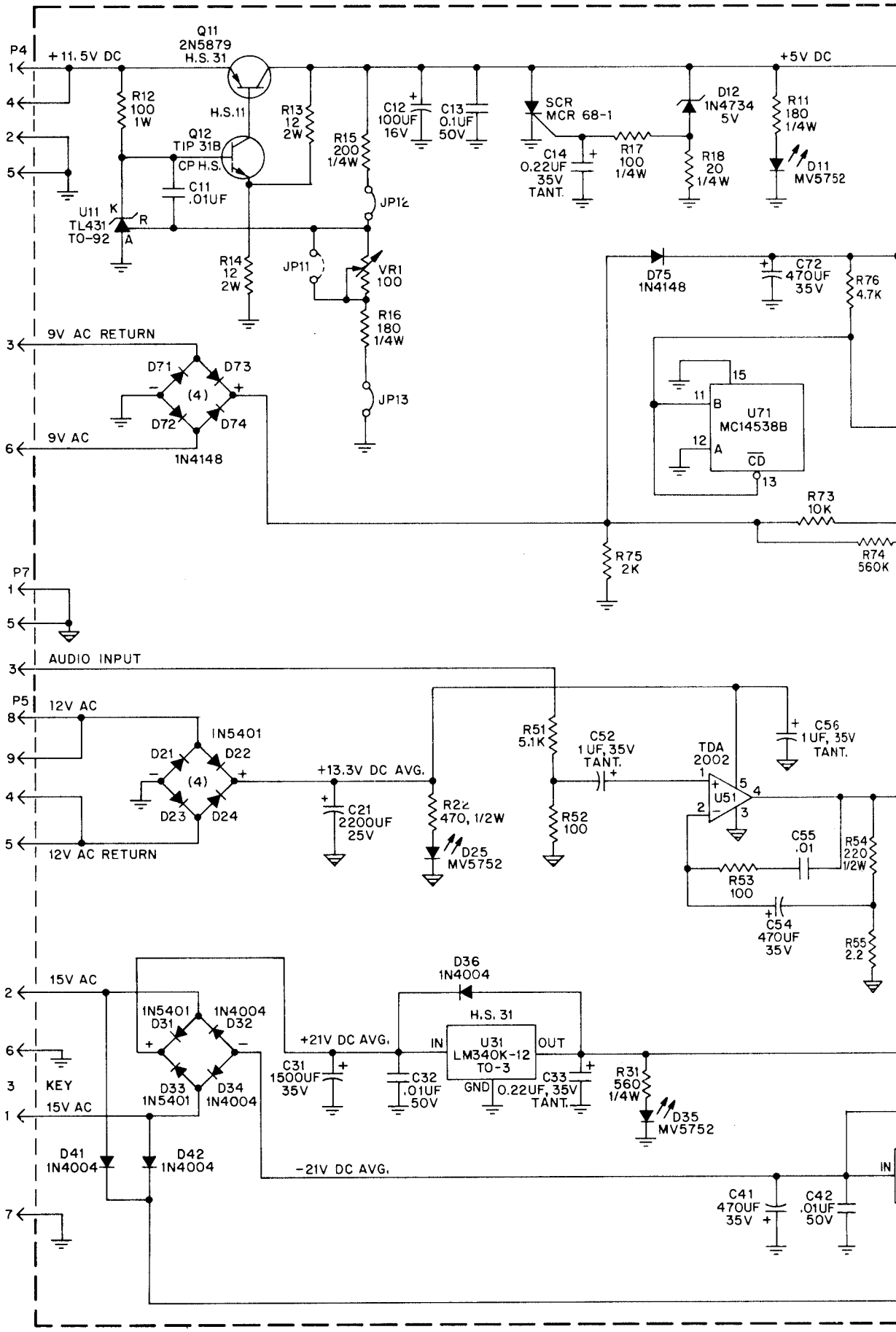
P4
+11.5V DC
Q11
2N5879
H.S. 31
H.S.11
R12
100
1W
Q12
TIP 31B
CP H.S.
C11
.01UF
U11
TL431
TO-92
K
R
A
R13
12
2W
R15
200
1/4W
JP12
C12
100UF
16V
C13
0.1UF
50V
SCR
MCR 68-1
C14
0.22UF
35V
TANT.
R17
100
1/4W
D12
1N4734
5V
R18
20
1/4W
+5V DC
R11
180
1/4W
D11
MV5752
JP11
VR1
100
R14
12
2W
R16
180
1/4W
JP13
D75
1N4148
C72
470UF
35V
R76
4.7K
9V AC RETURN
9V AC
D71
D72
D73
D74
(4)
1N4148
U71
MC14538B
CD
R73
10K
R74
560K
R75
2K
P7
AUDIO INPUT
P5
12V AC
12V AC RETURN
1N5401
D21
D22
D23
D24
(4)
+13.3V DC AVG.
C21
2200UF
25V
R22
470, 1/2W
D25
MV5752
R51
5.1K
C52
1 UF, 35V
TANT.
R52
100
TDA
2002
U51
C56
1 UF, 35V
TANT.
C55
.01
R53
100
R54
220
1/2W
C54
470UF
35V
R55
2.2
15V AC
KEY
15V AC
1N5401
D31
1N4004
D32
D33
1N5401
D34
1N4004
D36
1N4004
H.S. 31
+21V DC AVG.
IN
U31
LM340K-12
TO-3
OUT
GND
C31
1500UF
35V
C32
.01UF
50V
C33
0.22UF, 35V
TANT.
R31
560
1/4W
D35
MV5752
D41
1N4004
D42
1N4004
-21V DC AVG.
C41
470UF
35V
C42
.01UF
50V

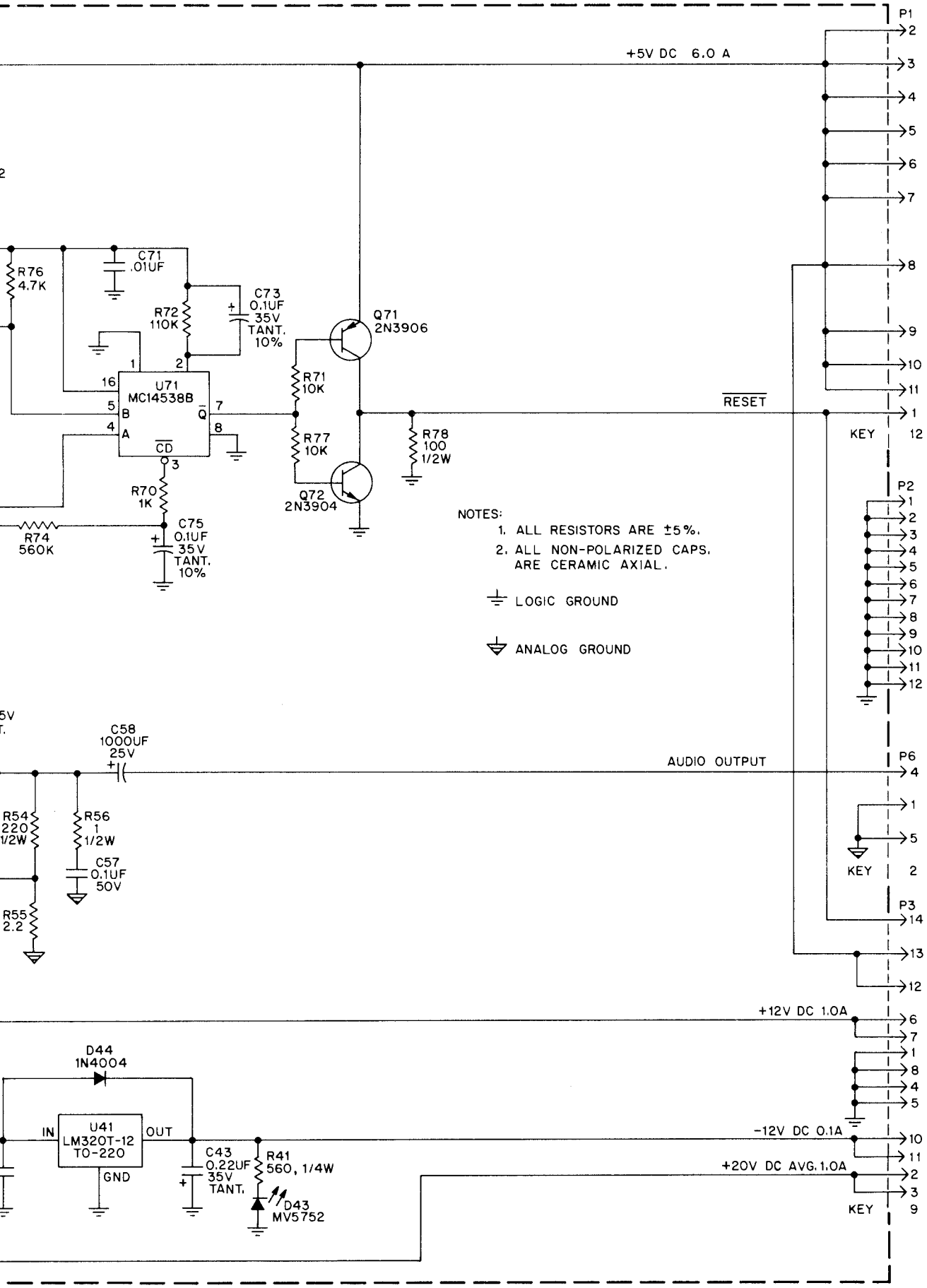

POWER SUPPLY ASSY. (A3), SCHEMATIC DIAGRAM

X. WIRING AND SCHEMATIC DIAGRAMS, PARTS LISTS

SOUND BOARD (A6) COMPONENT LOCATION

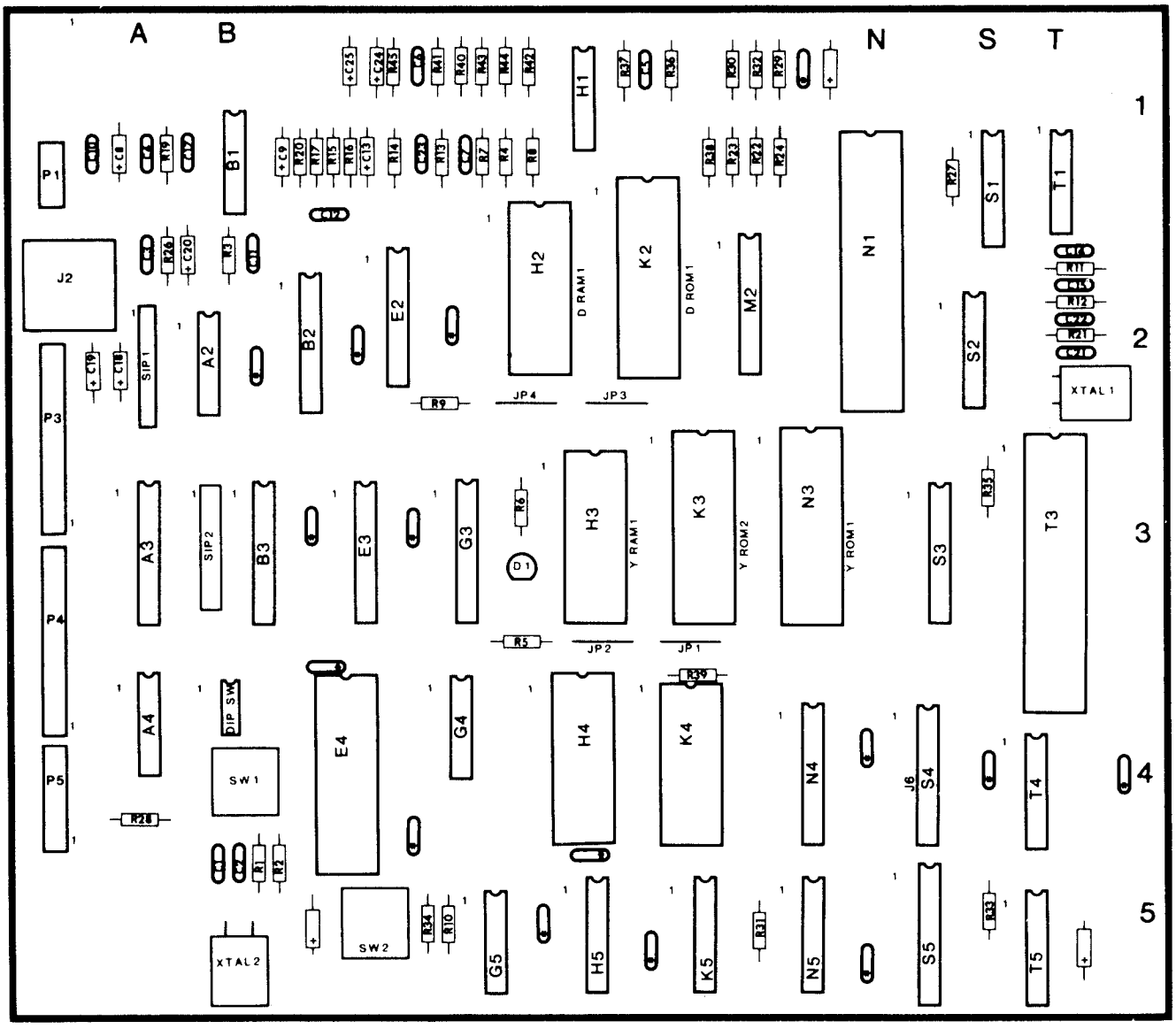

SOUND BOARD (A6) PARTS LIST

REFERENCE	DESCRIPTION	PART NO.
	Sound Board Assy	MA-495
C1, C2	Capacitor, 22PF, 50V MONO AX-CM, 10%	XO-633
C3, C21	Capacitor, 0.1UF, 50V MONO AX-GL	XO-637
C5, C6	Capacitor, .01UF, 50V MONO AX-GL, 10%	XO-747
C7, C17, C23	Capacitor, 1UF, 50V CM-RD Non-Polarized	XO-294
C8, C9, C10 C18, C19, C24, C25	Capacitor, 10UF, 25V TANT-AX, 10%	XO-127
C11	Capacitor, 10PF, 50V AX-CM, +80%-20%	XO-635
C13, C20	Capacitor, 1UF, 50V TANT-AX	XO-217
C14	Capacitor, 68PF, 50V MONO AX-CM, 10%	XO-636
C15	Capacitor, .047UF, 50V MONO AX-CM, 20%	XO-638
ALL UNMARKED CAPACITORS	0.1UF, 50V CM-AX	XO-230
ALL UNMARKED POLORIZED CAPACITORS	10UF, 25V TANT-AX, 10%	XO-127
D1	Diode, MV5752	XO-270
DIP SW	DIP Switch, 4 Position, 8 Pin	XO-640
J2	Phone Jack	XO-744
P1	3 Pin Wafer Conn.	XO-703
P3, P4	9 Pin Wafer Conn.	XO-375
R1	Resistor, 10M OHM, 5% ¼W	XO-73
R2, R5, R9, R10, R27, R28, R31, R33-R35, R39	Resistor, 1K OHM, 5% ¼W	XO-5
R3, R13	Resistor, 4.7K OHM, 5% ¼W	XO-7
R4, R7, R8, R22-R24	Resistor, 68 OHM, 5% ¼W	XO-748
R6	Resistor, 240 OHM, 5% ¼W	XO-173
R11, R12	Resistor, 470 OHM, 5% ¼W	XO-35
R14	Resistor, 6.8K OHM, 5% ¼W	XO-8
R15, R20	Resistor, 1.2K OHM, 5% ¼W	XO-175
R16, R17, R19, R26, R29, R30, R32, R37, R38, R40-R44	Resistor, 10K OHM, 5% ¼W	XO-18
R36, R45	Resistor, 33K OHM, 5% ¼W	XO-43
SIP1, SIP2	Resistor Pack, Sip, 1K OHM, 9 Pin	XO-493
SW1, SW2	Switch, Push Button, N.O	XO-365
XTAL1	Crystal, 4.0 MHz	XO-366
XTAL2	Crystal, 3.12 MHz	XO-639
	24 Pin DIP Socket	XO-529
	28 Pin DIP Socket	XO-536
	40 Pin DIP Socket	XO-530
A2	7430 8-input "NAND" gate	XO-643
A3, B2	74LS373 Octal D-type flip flop	XO-445
A4	74LS74 Dual D-type flip flop	XO-434
B1, H1	LM324 Quad op-amp	XO-644
B3	74LS244 Octal buffer/ line driver	XO-117
E2	AD7528J DAC	XO-647
E3, G3, N4, S5	74LS374 Octal D-type flip flop	XO-96
E4	SP0250 Speech generator	XO-645
G4, T1	74LS04 Hex inverter	XO-418
G5	74LS08 Quad 2-input "AND" gate	XO-86
H2, H3	4801 1K x 8 SRAM	XO-193
H4, K4	AY-3-8913 Sound generator	XO-646
H5, K5, N5, S1, T5	74161 Synchronous presettable binary counter	XO-192
K2, K3, N3	2732A 4K x 8 EPROM	XO-485
N1, T3	R6502-13 CPU	XO-360
N2, S3	74LS245 Octal bus transceiver	XO-79
S2	74LS139 Dual 1 of 4 decoder	XO-419
T4	74LS138 1 of 8 decoder/ demultiplexor	XO-437

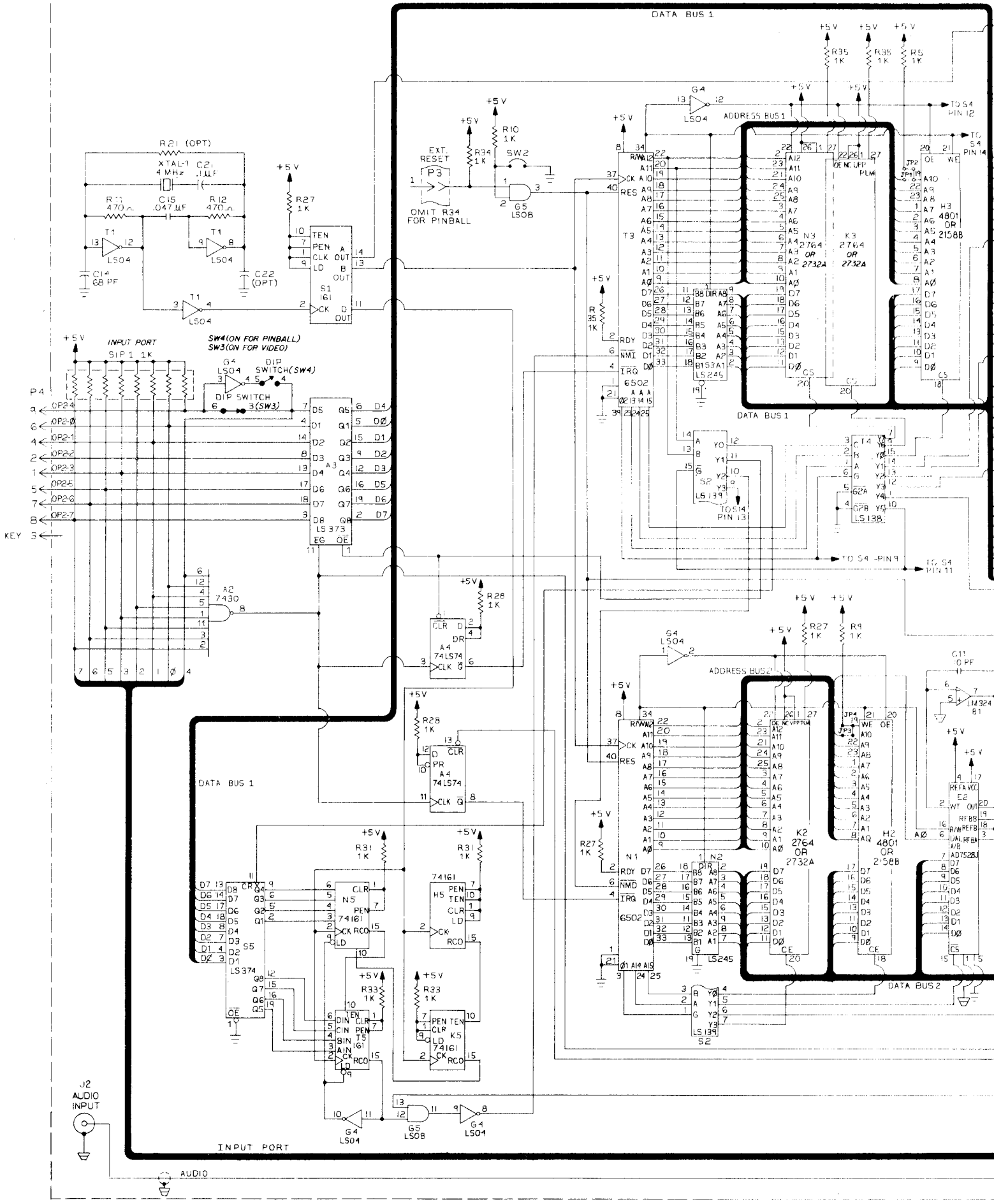
DATA BUS 1
ADDRESS BUS 1
ADDRESS BUS 2
DATA BUS 2
INPUT PORT
SW4(ON FOR PINBALL)
SW3(ON FOR VIDEO)
DIP SWITCH(SW4)
DIP SWITCH 3(SW3)
EXT. RESET
OMIT R34 FOR PINBALL
J2 AUDIO INPUT
AUDIO
KEY

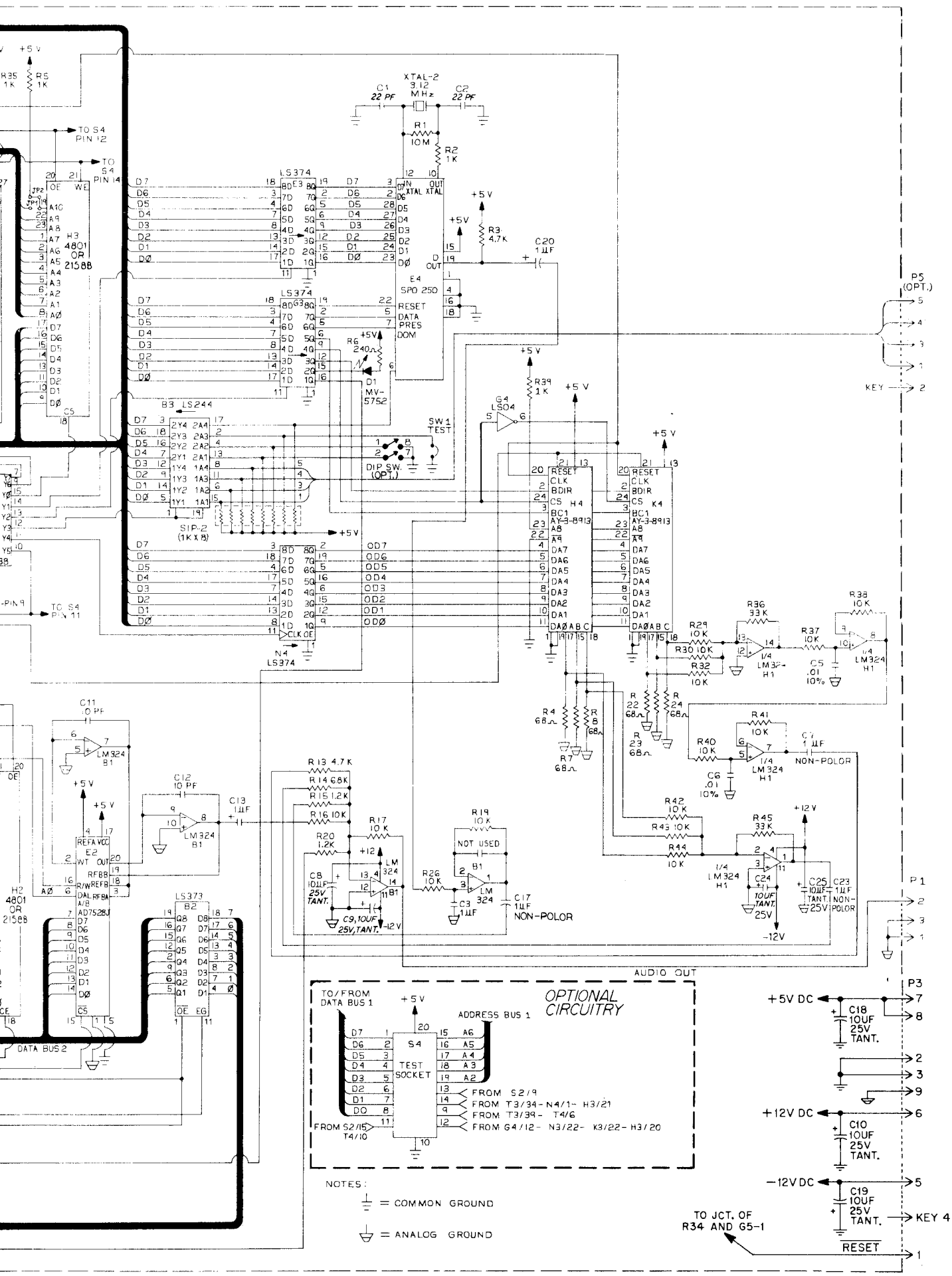

SOUND BOARD ASSY. (A6), SCHEMATIC DIAGRAM

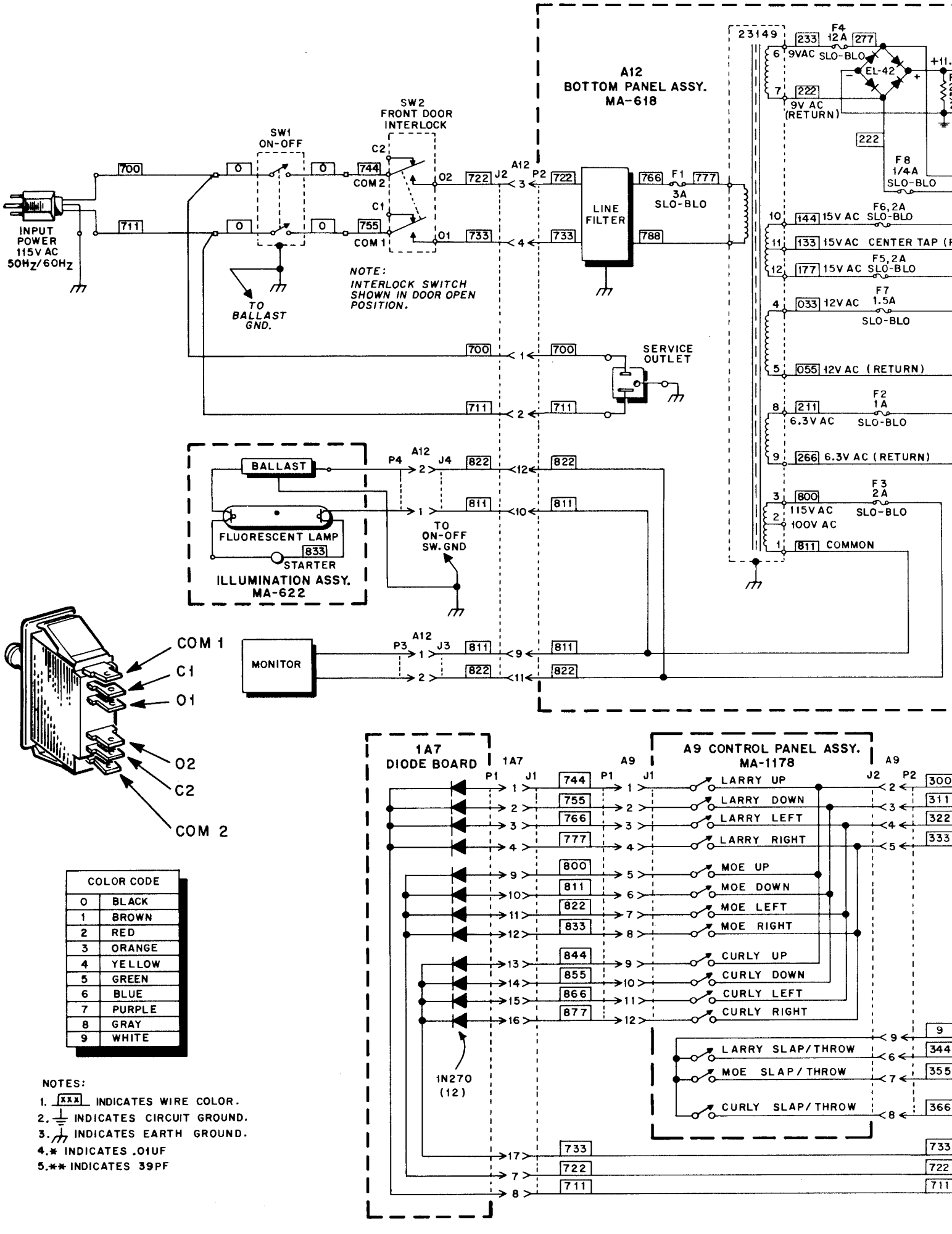

COLOR CODE	
0	BLACK
1	BROWN
2	RED
3	ORANGE
4	YELLOW
5	GREEN
6	BLUE
7	PURPLE
8	GRAY
9	WHITE

NOTES:

1. [XXX] INDICATES WIRE COLOR.
2. ⏚ INDICATES CIRCUIT GROUND.
3. ⏚ INDICATES EARTH GROUND.
4. * INDICATES .01UF
5. ** INDICATES 39PF

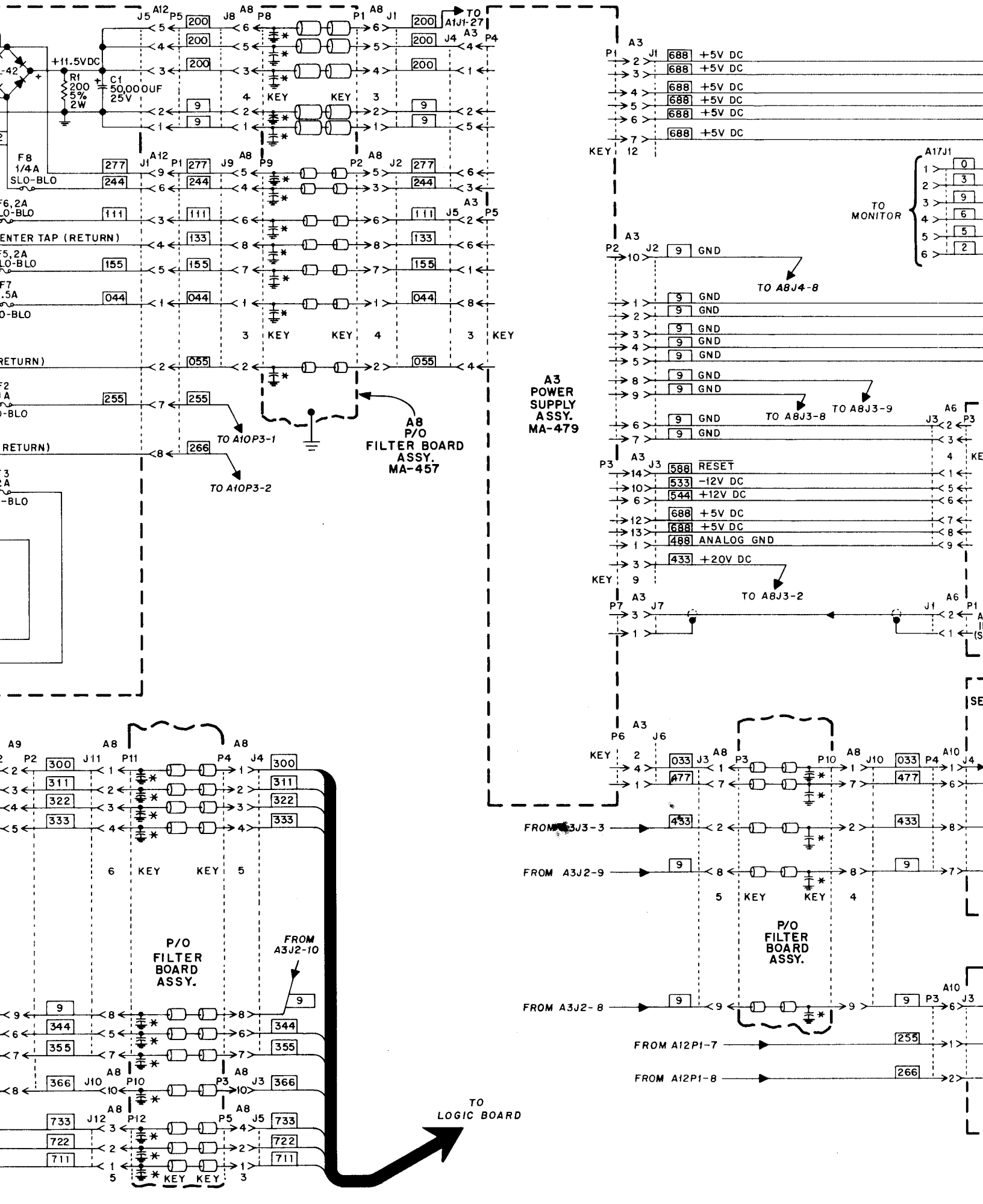
+11.5VDC
R1 200 5% 2W
C1 50,000UF 25V
F8 1/4A SLO-BLO
ENTER TAP (RETURN)
TO A10P3-1
TO A10P3-2
A8 P/O FILTER BOARD ASSY. MA-457
A3 POWER SUPPLY ASSY. MA-479
TO A1J1-27
+5V DC
GND
RESET
-12V DC
+12V DC
ANALOG GND
+20V DC
TO A8J4-8
TO A8J3-8
TO A8J3-9
TO A8J3-2
TO MONITOR
FROM A3J3-3
FROM A3J2-9
FROM A3J2-10
FROM A3J2-8
FROM A12P1-7
FROM A12P1-8
P/O FILTER BOARD ASSY.
TO LOGIC BOARD

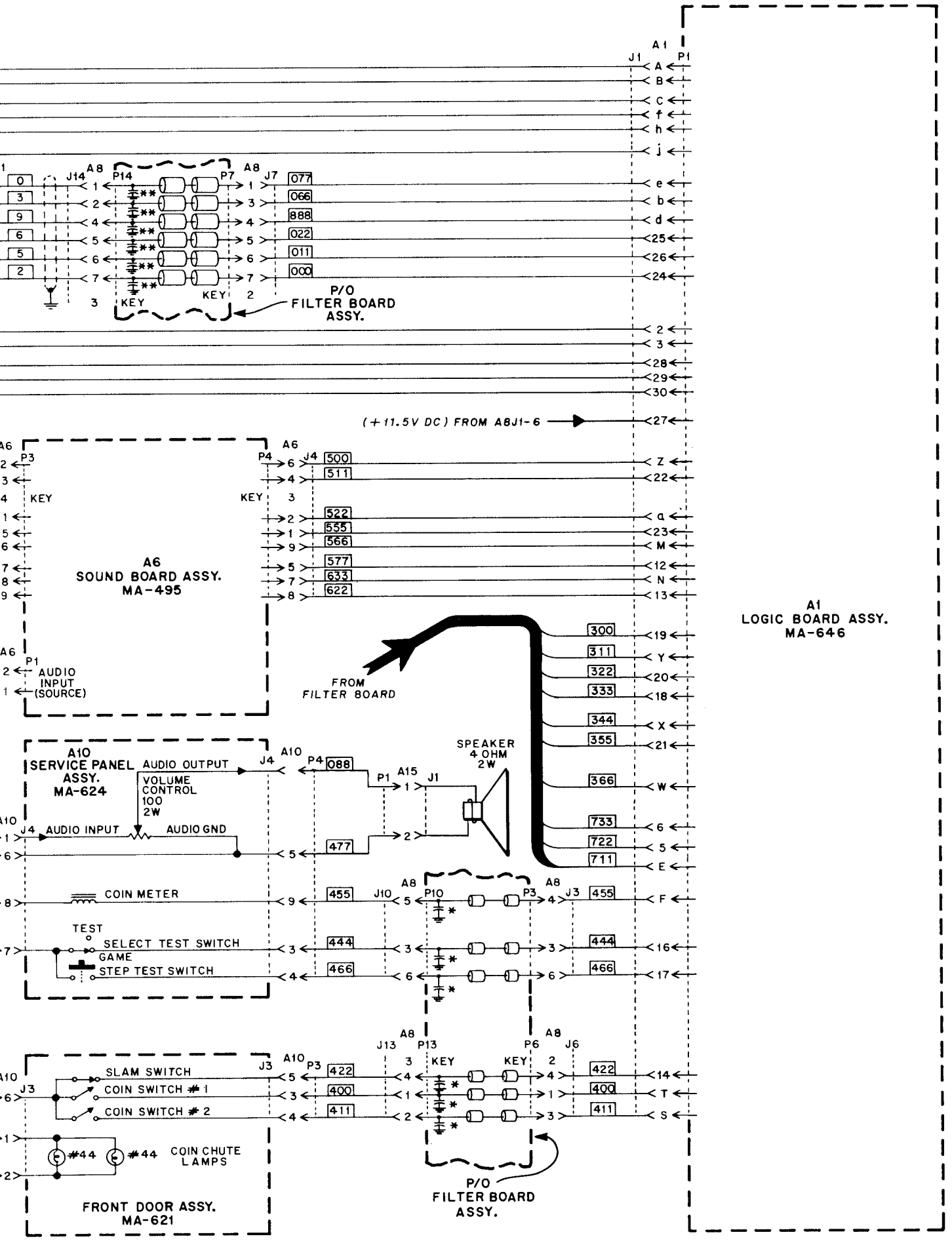

PRIMARY POWER/FILTER BOARD/INTERCONNECTION DIAGRAM

XI. PARTS INFORMATION

TABLE OF CONTENTS

PAGE

SPEAKER/MARQUEE ASSY. 34

ILLUMINATION ASSY. 34

CONTROL PANEL ASSY. 34

SERVICE PANEL ASSY. 34

BOTTOM PANEL ASSY. 34

CABINET PARTS (INTERIOR) 35

CABINET PARTS (EXTERIOR) 35

FILTER BOARD 35

XI. PARTS INFORMATION

SPEAKER/MARQUEE ASSY., ILLUMINATION ASSY.

ITEM	DESCRIPTION	PART NO.
1.	Illumination Assy.	MA-622
2.	Starter	EL-69
3.	Ballast (60HZ)	EL-70
4.	Lamp, Fluorescent	LA-4
5.	Cable Assy. (Illumination)	MA-626
6.	Speaker Assy.	MA-459
7.	Speaker	EL-83
8.	Speaker Grill	20931
9.	Illumination Trim	23067
10.	Cable Assy. (Speaker)	MA-318
11.	Marquee, Lexan	24080

CONTROL PANEL ASSY.

ITEM	DESCRIPTION	PART NO.
1.	Control Panel Assy.	MA-1178
2.	Short Button;	
	White	21970
	Green	24041
	Blue	24042
3.	Button Holder and Switch (3)	21971
4.	Joystick (3)	23189
5.	Cable Assy.	MA-633
6.	Lexan Overlay	24079

SERVICE PANEL ASSY.

ITEM	DESCRIPTION	PART NO.
1.	Service Panel Assy.	MA-620
2.	Cable Assy.	MA-624
3.	Switch (Pushbutton)	EL-57
4.	Switch (Toggle)	23506
5.	Volume Control	XO-199
6.	Coin Meter	EL-84

BOTTOM PANEL ASSY.

ITEM	DESCRIPTION	PART NO.
1.	Bottom Panel Assy.	MA-618
2.	Transformer	23149
3.	Capacitor, 50,000UF, 25V	XO-342
4.	Resistor, 200 Ohm, 5%, 2W	XO-142
5.	Fuse, 3 Amp, SLO-BLO	EL-9
6.	Cable Assy. (Secondary)	MA-630
7.	Fuse, 1 Amp, SLO-BLO	EL-6
8.	Fuse, 12 Amp, SLO-BLO	FSI-83
9.	Bridge Rectifier	EL-42
10.	Fuse, 2 Amp, SLO-BLO	EL-7
11.	1.5 Amp, SLO-BLO	EL-34
12.	1/4 Amp, SLO-BLO	EL-5
13.	Service Outlet	18133
14.	Line Filter	EL-50
15.	Cable Assy. (Primary)	MA-631

XI. PARTS INFORMATION

CABINET PARTS (INTERIOR)

ITEM	DESCRIPTION	PART NO.
1.	Back Door	23073
2.	Interconnect Cable	MA-635
3.	Cable Assembly, Master Electronics	MA-636
4.	Bottom Panel Assembly	MA-618
5.	Sound/Speech Board Assembly	MA-1181
6.	Power Supply Assembly	MA-479
7.	Logic Board Assembly	MA-1182
8.	Filter Board Assembly	MA-457
9.	Shield, Top	22632
10.	Shield, Bottom	22633
11.	Clamp Bracket, Shield	22631
12.	Cable Assembly, High Voltage	MA-619
13.	Cable Assembly, Monitor	22620
14.	Cable Assembly, Front Door	MA-625
15.	Line Cord, Bushing and Plate	23366
16.	Rear Door Lock	23975
17.	Anchor Plate, Lock	23967
18.	Slam Switch and Bracket	23791

CABINET PARTS (EXTERIOR)

ITEM	DESCRIPTION	PART NO.
1.	Lexan Overlay	24095
2.	Side Decal (2)	24103
3.	Top Glass	24039
4.	CRT Frame	24081
5.	Monitor Filter Glass	22849
6.	Monitor Mask	22463
7.	Monitor	21981
8.	Interlock Switch	EL-66
9.	Cover, Interlock Switch	21888
10.	Leg Adjuster	MH-21
11.	On-Off Switch	23799
12.	Switch Plate	18769
13.	Vent Channel	21754

FILTER BOARD

ITEM	DESCRIPTION	PART NO.
	Filter Board Assy.	MA-457
A8P1	6 Pin Wafer Conn.	XO-373
A8P2	9 Pin Wafer Conn.	XO-375
A8P3	10 Pin Wafer Conn.	XO-336
A8P4	8 Pin Wafer Conn.	CO-339
A8P5	7 Pin Wafer Conn.	XO-335
A8P6	4 Pin Wafer Conn.	XO-369
A8P7	7 Pin Wafer Conn.	XO-335
A8P8	6 Pin Wafer Conn.	XO-373
A8P9	9 Pin Wafer Conn.	XO-375
A8P10	10 Pin Wafer Conn.	XO-336
A8P11	8 Pin Wafer Conn.	XO-339
A8P12	7 Pin Wafer Conn.	XO-335
A8P13	4 Pin Wafer Conn.	XO-369
A8P14	7 Pin Wafer Conn.	XO-335
	Capacitor, .01UF, 50V CM-AX +80%-20% (38 each)	XO-229
	Capacitor, 39PF, 50V CM-AX (6 each)	XO-334
	Ferrite Bead (22 each)	XO-337
	Ferrite Bead (66 each)	XO-338

LIMITED WARRANTY

Mylstar Electronics, Inc. warrants to the initial purchaser of the Mylstar Electronics, Inc. machine that the items listed in the following schedule as installed and used in the original Mylstar Electronics, Inc. machine will for the applicable period set forth in the schedule, computed from the initial date of purchase from an authorized Mylstar Electronics, Inc. distributor, be free of defects in materials and workmanship:

SCHEDULE

GAME	ITEM	WARRANTY PERIOD
Pinball	All Electronic Printed circuit boards	90 days
Pinball-Video	All Electronic Printed Circuit Boards	90 days
	Card Cage	90 days
	Television Monitor	30 days
Video	All Electronic Printed Circuit Boards	90 days
	Television Monitor	30 days
Video Disc	Video Disc Player	60 days

This Limited Warranty does not apply to any parts damaged in the course of handling or assembling by the customer or damage due to other than normal use or use in violation of instructions or reasonable practices, or further damaged in return shipment. This Limited Warranty is made only to the original customer, and is and shall be in lieu of all other warranties expressed or implied, and of all other obligations or liabilities on the part of Mylstar Electronics, Inc. and in no event shall Mylstar Electronics, Inc. be liable for any anticipated profits, consequential damages, loss of time, or other losses incurred by the customer in connection with the purchase or operation of Mylstar Electronics, Inc. machines or components thereof.

The registration card with each Mylstar Electronics, Inc. factory-wired machine must be filled in and returned to Mylstar Electronics, Inc. within ten days after date of purchase for this Limited Warranty to be effective. This Limited Warranty applies only to machines so registered.

THIS LIMITED WARRANTY IS IN LIEU OF ANY OTHER EXPRESS OR IMPLIED WARRANTIES, INCLUDING ANY IMPLIED WARRANTY OF MERCHANTABILITY OR FITNESS, AND OF ANY OTHER OBLIGATION ON THE PART OF THE SELLER AND MYLSTAR ELECTRONICS, INC.

MYLSTAR ELECTRONICS INC.

MYLSTAR ELECTRONICS, INC.
165 West Lake Street
Northlake, Illinois 60164
Tel (312) 562-7400
Telex 72-8463

A Columbia Pictures Industries Company

© 1984 Mylstar Electronics, Inc.
All Rights Reserved
Printed in U.S.A.