MIDWAY

October 1993
16-40029-101

MORTAL KOMBAT II

OPERATIONS MANUAL

Operation & Adjustments • Testing & Problem Diagnosis
Parts Information • Wiring Diagrams & Schematics

MORTAL KOMBAT II
Instructions

Insert Coin(s)

In a two player game, the loser pays and the winner stays.

Press the Punch and Kick buttons to attack an opponent.

Use the joystick to make the screen player jump or duck, and move left or right.

Use joystick and button combinations to discover secret moves.

MIDWAY Manufacturing Company reserves the rights to make modifications and improvements to its products. The specifications and parts identified in this manual are subject to change without notice.

MORTAL KOMBAT II

TABLE OF CONTENTS

Section 1 Operation and Troubleshooting

Safety 1-2
Set-up Procedure
Installation & Inspection 1-3
Location Requirements 1-3
Cabinet Assembly Diagram 1-4
Servicing 1-6
Game Features
Starting-up 1-8
Player Controls 1-8
Control Panel Diagram 1-8
Game Operation
Control Switches 1-9
Control Switch Location Diagram 1-9
Menu System Operation
Operation 1-10
Main Menu 1-10
Diagnostic Tests 1-11
Switch Test 1-11
DIP Switch Test & Table 1-12
CPU & Sound Tests 1-13
Monitor Patterns & Burn-in Test 1-14
Coin Bookkeeping 1-15
Game Audits 1-16
Game Adjustments 1-17
Standard Pricing Table 1-19
Custom Pricing Table 1-20
Utilities 1-21
Volume Adjust 1-22
Troubleshooting 1-23

Section 2 Parts Information

Cabinet Hardware, PC Boards 2-2
Control Panel Assembly, Fluorescent Lamp Assembly, Speakers, Transformer Assembly 2-3
Cables, Monitor, Manuals 2-4
Power Supply Switcher Assembly 2-5
CPU Board Assembly 2-6
CPU Board Parts 2-7
Memory Expansion Board Assembly 2-8
Memory Expansion Board Parts 2-9
Sound Board Assembly 2-10
Sound Board Parts 2-11

Section 3 Diagrams and Schematics

JAMMA Chart & Interboard Wiring 3-2
Cabinet Wiring Diagram 3-3
Power Wiring Diagram & Transformer Chart 3-4
CPU Board Schematic 3-5
Memory Expansion Board Schematic 3-27
Sound Board Schematic 3-33
Electronic Rack Interboard Wiring Diagram 3-38

© Copyright 1993 MIDWAY Manufacturing Company

MORTAL KOMBAT II

SECTION
one

Operation

Safety Notices

The following safety instructions apply to all game operators and service personnel. Specific warnings and cautions will be found throughout this manual where they apply. We recommend that you read this page before preparing your game for play.

⚠ CAUTION

AC POWER CONNECTION. Before connecting the game to the AC power source, verify that the "line voltage selection chart" jumper wires are installed correctly for the line voltage in your area. For details, refer to Section 3.

PROPERLY GROUND THE GAME. To avoid electrical shocks, do not plug in the game until it has been inspected and properly grounded. MIDWAY games should only be plugged into a grounded 3-wire outlet. Shocks will also result, if the control panel is not properly grounded! After servicing any parts on the panel, assure that the ground wires are secure. Only then should you lock up the game.

DISCONNECT POWER DURING REPAIRS. To avoid electrical shock, disconnect the game from the AC power source before removing or repairing any part of the game.

USE THE PROPER FUSE. To avoid electrical shock, use the replacement fuse which is specified in the parts list for this game. The replacement fuse must match the original fuse in fuse type, voltage rating, and current rating.

MONITOR PRECAUTIONS. When removing or repairing the monitor, extra precautions must be taken to avoid electrical shock because high voltages may exist within the monitor circuitry and cathode ray tube (CRT) even after power has been disconnected. Do not touch internal parts of the monitor with your hands or metal objects! Always discharge the CRT by the following method: Attach one end of a large, well-insulated, 20-kV jumper to ground. Momentarily touch the free end of the grounded jumper to the anode by sliding it under the anode cap. Wait two minutes and discharge the anode again.

HANDLE FLUORESCENT TUBE AND CRT WITH CARE. If you drop a fluorescent tube or CRT and it breaks, it will implode! Shattered glass can fly eight feet or more from the implosion.

ATTENTION !

PROPERLY ATTACH ALL CONNECTORS. *Make sure that the connectors on each printed circuit board (PCB) are properly connected. If they do not slip on easily, do not force them. A reversed connector may damage your game and void the warranty. All connectors are keyed to fit specific pins on each board.*

Setup Procedure

INSTALLATION & INSPECTION

1. Remove all items from shipping container and set them aside. Inspect the exterior of the cabinet for any damage.

2. The keys are either taped to the coin return slot, or attached to joystick. Unlock and open the coin and cash box doors. Remove the leg levelers and spare parts which are stored in the cash box.

3. Remove the rear door of the cabinet. Inspect the interior for any signs of damage. Check all major assemblies to assure that they are mounted securely.

4. Tilt or lay the cabinet down. Locate the four threaded holes on the bottom of the cabinet (one in each corner), and install one leg leveler (with its hex nut) in each hole.

5. Stand the cabinet upright and make certain that it is in a stable position. Level the cabinet.

6. Refer to the game's Cabinet Wiring Diagram (section 3), and check to see that all cable connectors are correctly secured. DO NOT FORCE CONNECTORS. Watch for damaged connectors and avoid making reversed connections.

7. Determine the value of your line voltage with a meter. Then, check the power input wires to the main power supply transformer. Be sure they are connected to taps which correspond to your local line voltage value. If necessary, reconnect the power input wires to the transformer in accordance with the Tranformer Chart in section 3.

8. Lay the line cord (connected to the Power Chassis) in the slot along the bottom edge of the rear cabinet door. Replace the rear cabinet door. Close and lock the front coin and cash box doors.

9. Connect the line cord to a grounded (3-terminal) AC wall outlet.

10. Switch On the game, using the On/Off switch located on the upper left rear of the cabinet, to verify proper operation.

Game Location Requirements

Power
Domestic 115V @ 60 Hz
Foreign 230V @ 50 Hz

Temp.
32° F to 100° F
(0° C to 38° C)

Humidity.
Not to exceed 95% relative.

Cabinet Statistics

Dimensions.
Width 27"
Depth 41"
Height 73"

Weight.
Approx 402lbs

Cabinet Assembly

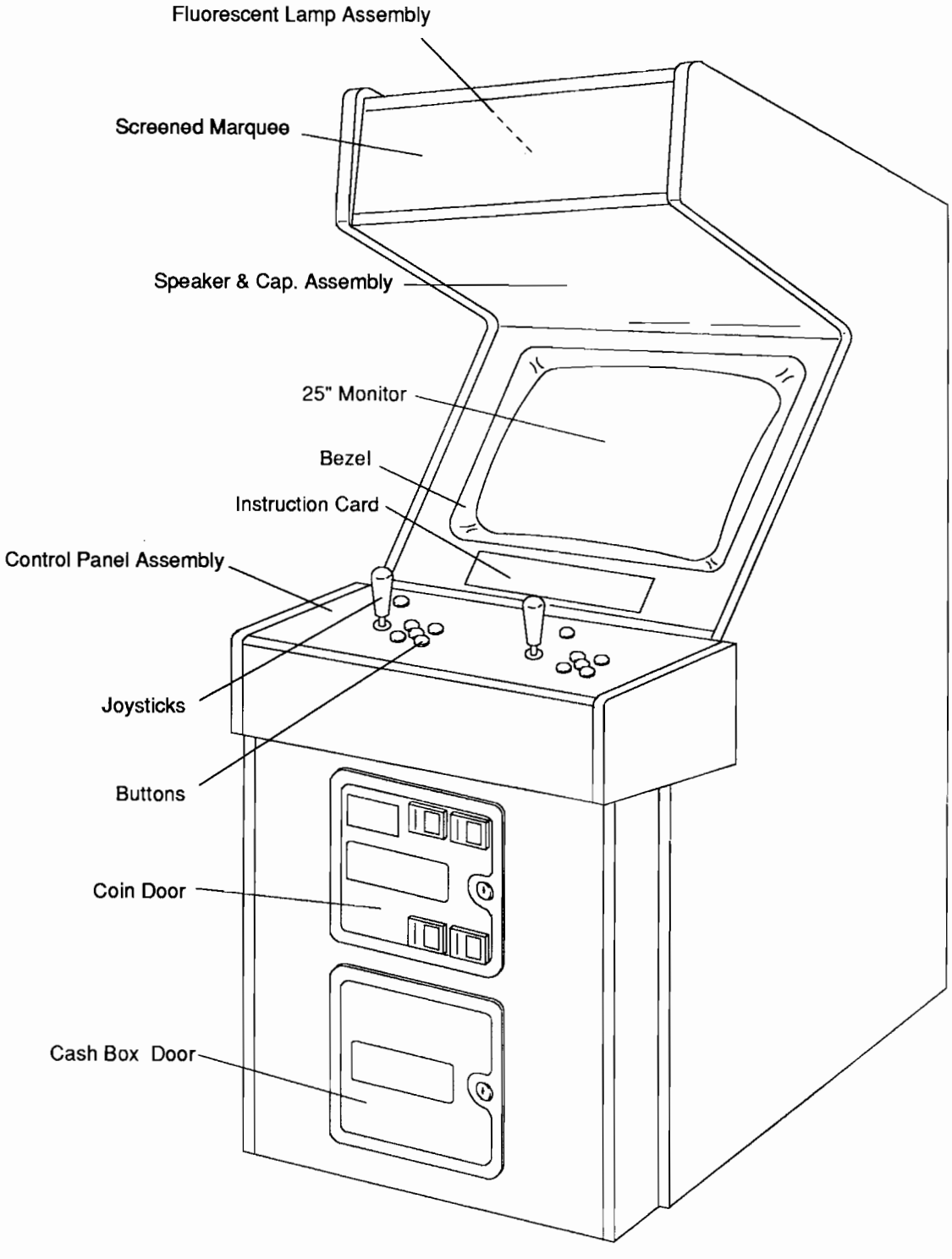

Front View

Cabinet Assembly

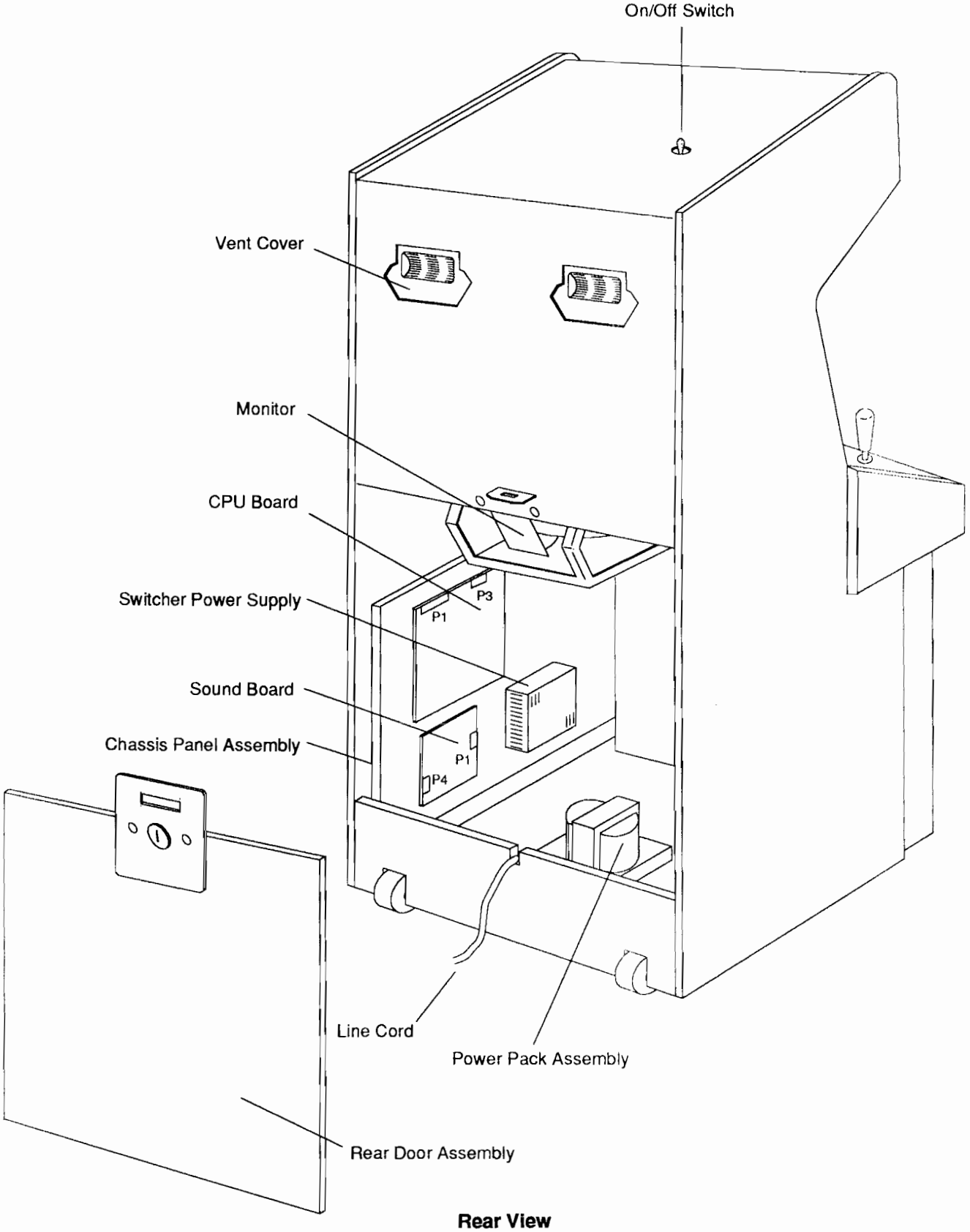

Rear View

Servicing

Servicing the Control Panel

Switch off power to the game and open the coin door. The control panel is held in place by two latches (located inside the cabinet) which provide constant pressure on the strikes. To release the latches, reach through the coin door opening toward the left and right sides of the cabinet. *Do not reach straight back through the coin door opening or you could damage the monitor control board.* Lift the latch handle and unhook the wire fasteners. Grip the joysticks and carefully tilt the control panel back on its hinge.

To return the control panel to its normal position, carefully lean it forward until it rests on the cabinet. Be careful not to let it slam down onto the cabinet, or to pinch any wires. Always reclasp the latches.

Caution

The monitor DOES NOT contain an isolation transformer in its chassis (it is mounted instead in the Power Chassis Assembly located on the floor of the cabinet). When servicing the monitor on a test bench, YOU MUST ISOLATE THE MONITOR FROM THE LINE VOLTAGE WITH AN ISOLATION TRANSFORMER.

Removal of Viewing Glass

Switch off power to the game, and open the control panel. Remove the five hex head screws and the black metal strip at the bottom of the viewing glass. Carefully, slide the glass from its side grooves and lift it clear of the cabinet.

Removal of Monitor Bezel

Switch off power to the game. Open the control panel and remove the viewing glass. Lift the bezel off of the monitor.

Caution

While removing the four bolts, firmly support the monitor from the front of the CRT so that it will not slip.

Monitor Replacement

We recommend that you read the WARNINGS section thoroughly before beginning this procedure.

Switch off power to the game. Remove the viewing glass and the monitor bezel. Completely disconnect the monitor from all of its cabling. Remove the four bolts securing the monitor's mounting flanges to its mounting panel. Pull the monitor carefully from the cabinet front.

■ Removal of the Marquee

Switch off power to the game. Remove the five hex head screws from the black strip on top of the cabinet. Remove the strip and carefully lift the marquee. Store the marquee carefully to prevent damage.

The fluorescent tube is now accessible for replacement. Remove the plastic lamp locks. Grasp the tube, give it a quarter turn, and remove it from its socket. Carefully place a new tube into the socket, and turn to reinstall.

WARNING

Use care in handling. If you drop a fluorescent tube and it breaks, it will implode!

■ Removal of the Fluorescent Light Assembly

Switch off power to the game. Remove the marquee glass. Disconnect the fluorescent light assembly from its power cable. Remove the screws that hold the assembly to the cabinet then lift out the assembly.

■ Removal of the Speakers

Switch off power to the game. Remove the marquee glass. The speakers come out from the front of the cabinet. Be sure to disconnect the cabling and remove the nuts and machine screws before attempting to remove the speakers from their enclosure. Carefully reinstall the seals upon completing any task in the speaker enclosure.

■ Volume Control, Begin Test Switch, and Service Credit Switch

Open the coin door. The game's volume control and diagnostic pushbutton switches are located on a small bracket on the door. The volume is controlled by the two center buttons. Depress the Volume Up or the Volume Down button until the desired sound level is reached. The Begin Test switch, on the right, activates the game's menu system. The Service Credit switch, on the left, allows credits to be alloted for service testing without affecting the game's bookkeeping total.

Game Features

STARTING UP

Switch on power to the game. A "rug" pattern appears on the CRT screen. When the "rug" pattern ends, the screen shows CHECKING SCRATCH RAMS, and then CHECKING ROMS. The next screen shows **MORTAL KOMBAT II** REVISION LEVEL, CMOS TEST OK and the COIN SETTING. The game then begins the Attract Mode.

Note

When an error is detected during Start-up Tests, game start-up does not progress, and an error message appears on the screen.

Insert the desired amount of coins, bills or tokens. Press the appropriate Start button. Use the joysticks to select an on-screen player. Use a control panel button to lock in the selection. The game starts automatically.

Player Controls

- **Start Buttons**
  Each player has a Start button which allows him/her to begin or continue play.

- **High Kick/High Punch Buttons**
  Allows the on-screen player to kick or punch an opponent in the upper body.

Note

Discover secret moves by using joystick and button combinations.

- **Low Kick/Low Punch Buttons**
  Allows the on-screen player to kick or punch an opponent in the lower body.

- **Block Buttons**
  Allows the on-screen player to block an opponent's punch, kick or special move.

- **Joystick**
  Allows the on-screen player to move, flip, jump and duck.

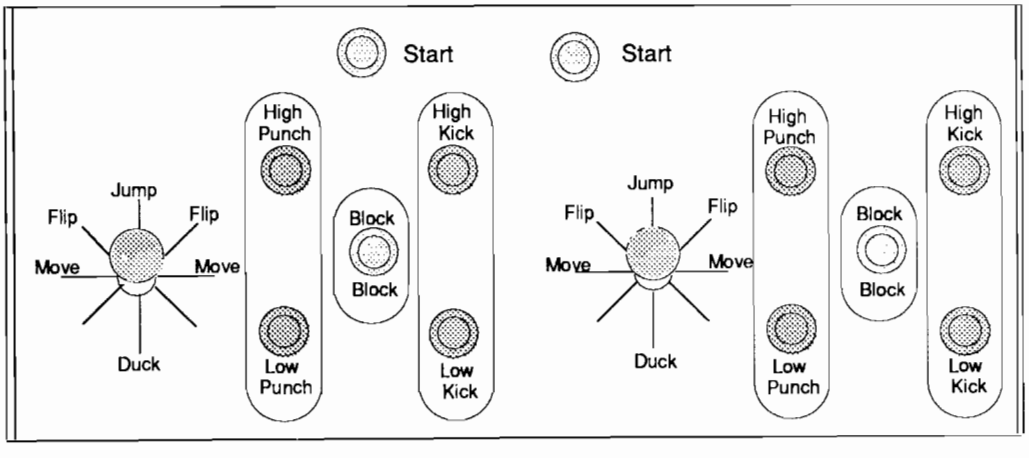

Control Panel

Game Operation

The **MORTAL KOMBAT II** Control Switches are located inside the coin door.

Control Switches

- The **Slam Tilt switch** detects any forceful vibrations against the coin door. This eliminates pounding for free games.
- The **Volume Down and Volume Up switches** increase or decrease the volume level of the music and speech. For greater profits, set your game's volume level at a nice loud setting.
- The **Begin Test switch** allows you to activate the game's menu system. Press the Begin Test switch to access the Main Menu. To exit the menu system, select EXIT TO GAME OVER from the Main Menu, then press any control panel button.
- The **Service Credit switch** is a special feature switch that allots credit without affecting the game's bookkeeping total.

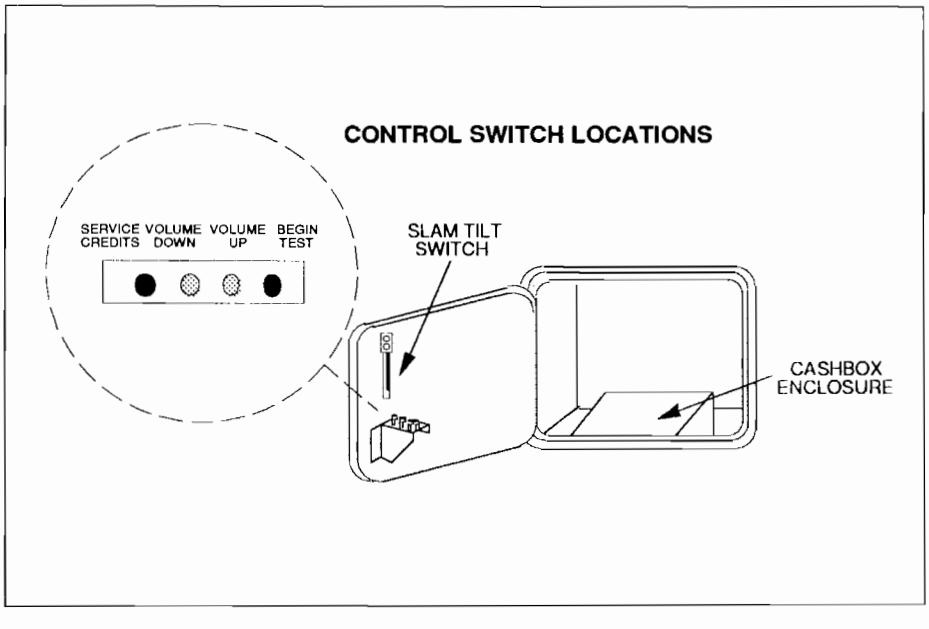

Menu System Operation

OPERATION

All **MORTAL KOMBAT II** Game Audits, Adjustments, and Diagnostics are options of the Main Menu. Each option in turn, has its own menu, listing several choices that you may act upon as desired.

Press the Begin Test switch on the coin door or close Switch #8 of DIP Switch Bank #2, to activate the Main Menu (shown below). Game adjustments, bookkeeping, and diagnostics are all accessible from this menu.

Move any joystick up or down to cycle through the menu options. Notice that the options are highlighted in sequence. Press any button to activate a highlighted option.
Note: Only highlighted options can be activated.

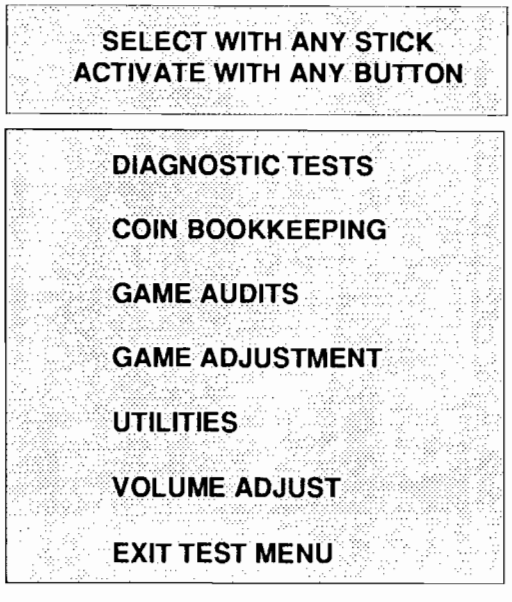

MAIN MENU

DIAGNOSTIC TESTS

To enter the Diagnostic Tests from the Main Menu, move any joystick to select (highlight) the Diagnostic Test option and press any control panel button to activate the option.

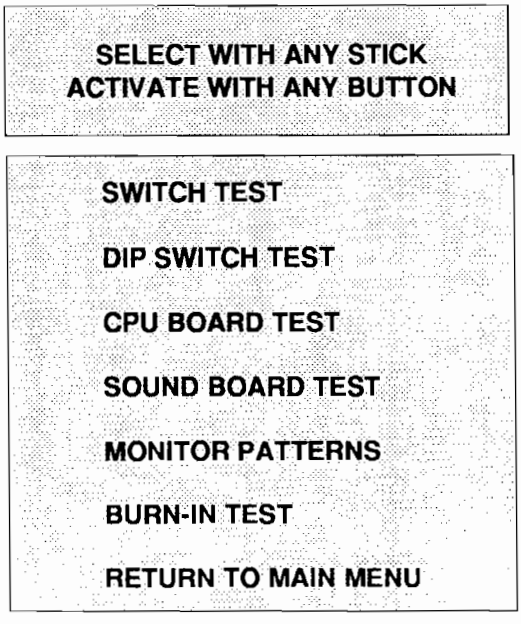

DIAGNOSTIC MENU

Switch Test

The Switch Test allows the operator to test the switches on the control panel and the coin door.

Select the Switch Test by using any joystick to highlight the Switch Test option, then press any control panel button to activate the option.

During the Switch Test, the top of the screen shows the locations of the control panel switches. The bottom of the screen shows the locations of the coin door switches. Press a control panel switch and the switch location, on the top of the screen, lights. Press a coin door switch and the switch location, on the bottom of the screen, lights. Release the switch and the screen returns to normal.

Press the Start buttons together to return to the Diagnostic Menu.

DIP Switch Test

The DIP Switch Test allows the operator to check the position of the two DIP Switches on the CPU Board. The operator can also change the setting of each position of each DIP Switch during this mode.

Use any joystick to select the DIP Switch Test and any control panel button to activate it. The screen displays their current settings.

To change a DIP Switch setting, press the switch to the desired setting, then check the screen to verify that the switch now shows the new setting.

Press any control panel button to return to the Diagnostic Menu.

DIP Switch 1 Settings Table

	SW 1	SW 2	SW 3	SW 4	SW 5	SW 6	SW 7	SW 8
Violence On	Off * On							
Blood in game		Off * On						
Low Blow in game			Off * On					
Attract Sounds On				Off * On				
Comic Offer On					Off * On			
Dollar Bill Validator Not Installed Installed						Off * On		
Not Used							Off * On	Off * On

DIP Switch 2 Settings Table

			SW1	SW2	SW3	SW4	SW5	SW6	SW7	SW8
Coinage DIP Switch CMOS			Off * On							
Coin Settings				Off *	Off *	Off *				
USA 1	Ger 1	Fr 1		On	Off	Off				
USA 2	Ger 2	Fr 2		Off	On	Off				
USA 3	Ger 3	Fr 3		On	On	Off				
USA 4	Ger 4	Fr 4		Off	Off	On				
USA ECA	Ger ECA	Fr ECA		On	Off	On				
N/U	N/U	N/U		Off	On	On				
N/U	N/U	N/U		On	On	On				
Free Play	Free Play	Free Play								
Country USA German French Not Used							Off * On Off On	Off * Off On On		
One Counter **Two Counters**									Off * On	
Test Switch Game Mode Test Mode										Off * On

* Indicates Factory Setting

CPU Board Test

The CPU Board Test (much like the Start-up Test) allows the operator to check the RAMs and ROMs.

Select the CPU Board Test with any joystick, then press any control panel button to activate the automatic test of the CPU Board's RAMs and ROMs.

When this test is activated a "rug" pattern appears on the screen. The screen then changes to show the layout of the RAMs and ROMs. A ROM or RAM location that is shown as black with a white outline is used and should turn either red or green. A ROM or RAM location that is shown as gray with a white outline is not used in this game. During the test ROMs or RAMs are good if they turn green and they are faulty if they turn red.

The CPU Test pauses when a bad ROM or RAM is detected. Press any button to continue the test.

Sound Board Test

This test allows listening to some of the sounds that this game is capable of producing.

Select the Sound Board Test with any joystick, then press any control panel button to activate it. The screen displays two test options.

GENERAL TEST analyzes the sound circuitry. The screen shows a list of error codes. A successful test causes a single "tone" to sound. Detection of a fault causes a series of tones or no tone at all to sound.
PLAY SOUNDS tests synthesized & digitized sounds from the Sound Board. Advance to the next sound by pressing any action button. Press either Start button to repeat a sound.

Select RETURN TO MAIN MENU or BACK TO DIAGNOSTIC MENU. Press any control panel button to activate your selection.

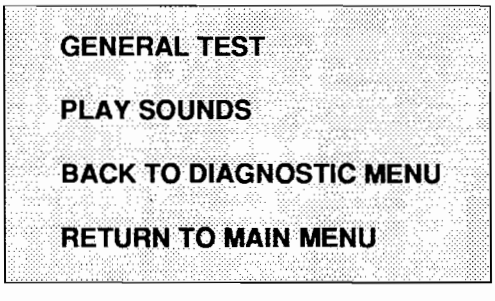

SOUND TEST MENU

Monitor Patterns

The Monitor Patterns Test provides a menu for testing the monitor.

Select the test with any joystick and activate with any control panel button. Once in the Monitor Patterns Test, move any joystick to select a test option and press any control panel button to activate it. Press any control panel button again to return to the Monitor Patterns Test menu.

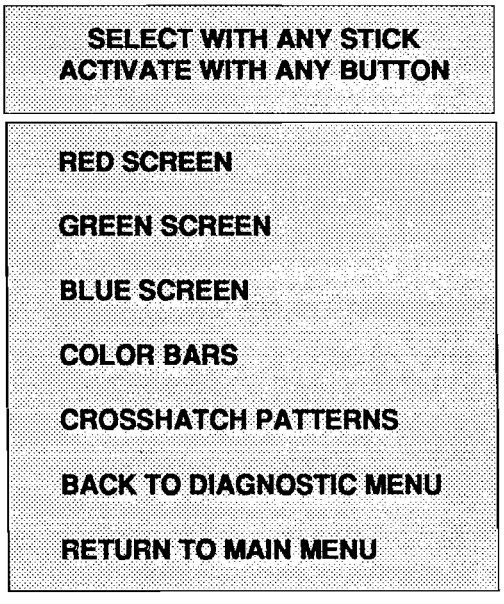

MONITOR PATTERN MENU

The **RED, GREEN** and **BLUE SCREEN** tests fill the screen with either red, green or blue.
The **COLOR BARS** test fills the screen with several shades of colors to help with red, green and blue level adjustments. Each color should appear sharp and clear.
The **CROSSHATCH PATTERNS** test fills the screen with a grid and a series of dots. The grid and the dots should be clear. The dots should appear round.

If any of the Monitor Pattern Tests shows a need for adjustment use the proper white knobs on the Monitor Board.

Use any joystick to select RETURN TO MAIN MENU or BACK TO DIAGNOSTIC MENU and activate with any control panel button.

Burn-in Test

The Burn-in Test continually repeats the CPU Board Test. Move any joystick to select the Burn-in Test, then press any control panel button to activate the test. When the Burn-in Test detects an error, the test stops and displays an error message on the screen. The second page of the Audit Table specifies the number of Burn-in cycles successfully completed. Use this test to find intermittent CPU problems.

To exit this test switch the game Off then On again.

COIN BOOKKEEPING

To enter the Coin Bookkeeping from the Main Menu, move any joystick to select the Coin Bookkeeping option, then press any control panel button to activate it.

The Coin Bookkeeping Table records the coinbox totals and game play counters. The left side of the table names the bookkeeping item and the right side shows the number of coins, credits, or plays for each item.

To exit Coin Bookkeeping, move any joystick to select RETURN TO MAIN MENU, then press any control panel button to activate it.

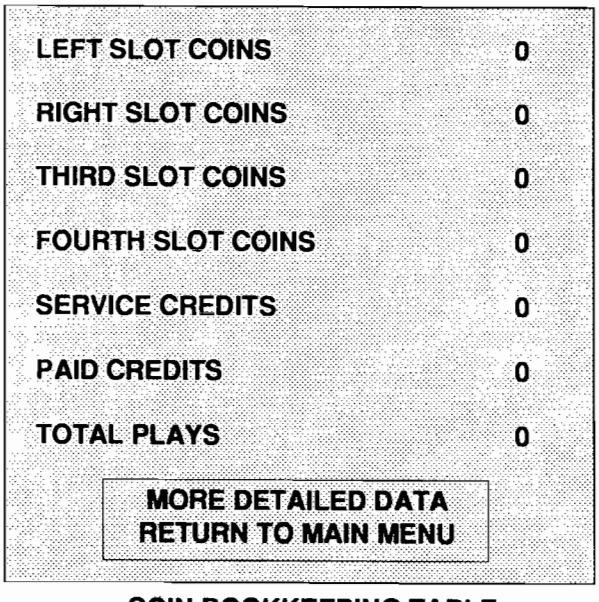

COIN BOOKKEEPING TABLE

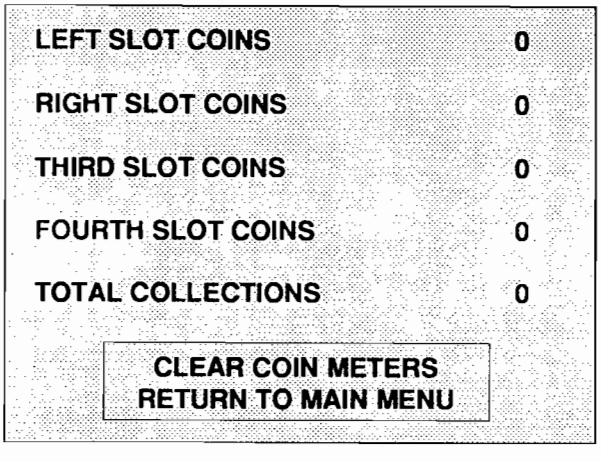

TOTAL COLLECTION TABLE

GAME AUDITS

To enter Game Audits from the Main Menu, move any joystick to select the Game Audits option, then press any control panel button to activate it. To advance to the next (or return to the previous) page of the Game Audit Table, move any joystick to select either "Next Audit Page" or "Previous Audit Page", then press any control panel button to change the page.

The Game Audits Table records the game play statistics. The left side of the table names the Audit item the right side shows the amount of play.

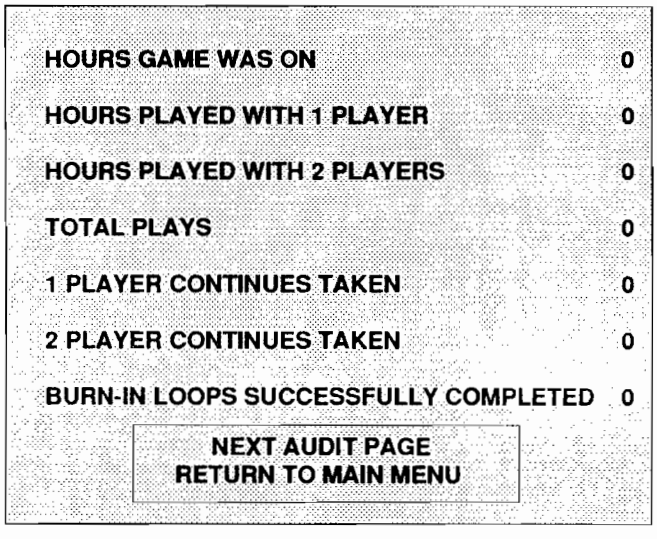

PAGE 1 OF AUDIT TABLE

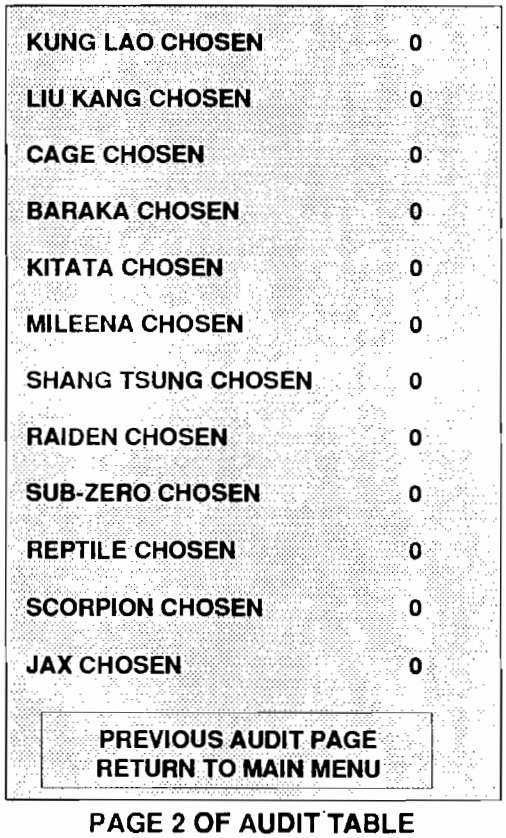

PAGE 2 OF AUDIT TABLE

To exit the Game Audit Table, move any joystick to select RETURN TO MAIN MENU, then press any control panel button to activate your selection.

GAME ADJUSTMENTS

Move any joystick to select the Game Adjustment option on the Main Menu, then press any control panel button to activate it.

The Game Adjustments Menu allows the owner/operator to change the Game Pricing and Game Difficulty.

The Game Adjustments Menu offers several options. Each option has several choices. Move any joystick to select an option, then press any control panel button to activate that option. The next menu screen provides a setting choice. Move any joystick to modify the setting value, then press any control panel button to lock in the new value and return to the Adjustment Menu. Move the joystick up to increase the setting value, move the joystick down decrease the setting value.

To exit the Adjustments Menu, use any joystick to select RETURN TO MAIN MENU, then use any control panel button to activate your selection.

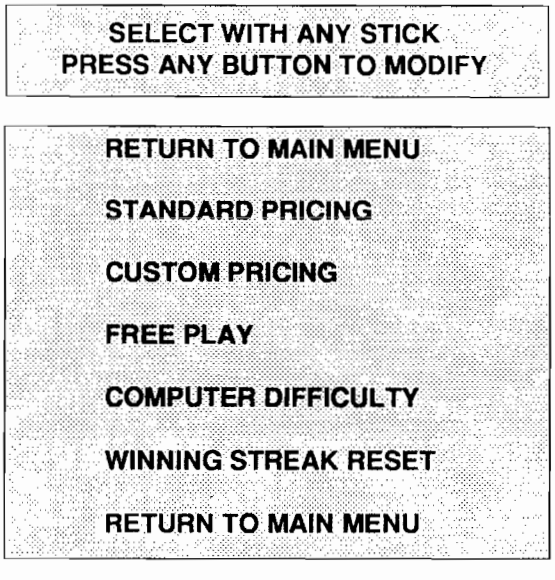

GAME ADJUSTMENT MENU

Note

Game Adjustments are explained in more detail on the following page.

Adjustment values set by DIP Switch, override adjustment values set by the menu system.

Game Adjustments

Standard Pricing
Standard Pricing allows the operator to choose any of the "Standard" selections for the Standard Pricing Table. See page 1-19.

Modify the setting value with any joystick. Press any control panel button to lock in the new value and return to the Adjustment Menu.

Custom Pricing
Custom Pricing allows the operator to install pricing other than that of the Standard Pricing Table. Custom Pricing also allows the operator to select the maximum amount of credits per game, the amount of credits required to start a game, and the amount or credits required to continue a game. This option is being adjusted from the Dip Switch Settings. In order to use custom pricing, switch #1 of DIP Switch Bank #2 must be set to on. See page 1-20.

Modify the setting value with any joystick. Press any control panel button to lock in a new value and return to the Adjustment Menu.

Free Play
This option selects free play. The setting choices for this adjustment are:

- No (factory)
- Yes

Computer Difficulty
This option determines the difficulty level of game play. The setting choices for this adjustment are:

-1 (Extra Easy)
-2 (Easy)
-3 (Medium; factory)
-4 (Hard)
-5 (Extra Hard)

Winning Streak Reset
This option resets the highest scores after a selected amount of games are played. The setting choices for this adjustment are:

- Reset every 5,000 games.
- Reset every 10, 000 games (factory).
- Reset every 15, 000 games.
- Do Not Reset.

Standard Pricing Table

Name	Settings Credit/Coin	Left Chute	Center Chute	Right Chute	Fourth Chute
USA 1	1/25¢ (2 to Start; 2 to Continue)	25¢	$1.00	25¢	
USA 2	1/25¢ (2 to Start; 1 to Continue)	25¢	$1.00	25¢	
USA 3	1/25¢ (1 to Start; 1 to Continue)	25¢	$1.00	25¢	
USA 4	1/50¢, 3/$1.00 (1 to Start; 1 to Continue)	25¢	$1.00	25¢	
USA 5	1/50¢, 4/$1.00 (2 to Start; 1 to Continue)	25¢	$1.00	25¢	
USA 6	1/50¢ (1 to Start; 1 to Continue)	25¢	$1.00	25¢	
USA 7	1/50¢, 3/$1.00 (1 to Start; 1 to Continue)	25¢	$1.00	25¢	
USA 8	1/50¢, 4/$1.00 (2 to Start; 2 to Continue)	25¢	$1.00	25¢	
USA ECA	1/25¢, 4/$1.00 (2 to Start; 2 to Continue)	$1.00	10¢	25$	5¢
German 1	1/1DM, 6/5DM	1DM		5DM	
German 2	1/1DM, 7/5DM	1DM		5DM	
German 3	1/1DM, 8/5DM	1DM		5DM	
German 4	1/1DM, 5/5DM	1DM		5DM	
German 5	1/1DM, 6/5DM	1DM		5DM	
German ECA	1/1DM, 2/2DM, 6/5DM	5DM	1DM	2DM	
France 1	2/5F, 5/10F	5F		10F	
France 2	2/5F, 4/10F	5F		10F	
France 3	1/5F, 3/10F	5F		10F	
France 4	1/5F, 2/10F	5F		10F	
France 5	2/5F, 5/10F, 11/2 x 10F	5F		10F	
France 6	2/5F, 4/10F, 9/2 x 10F	5F		10F	
France 7	1/5F, 3/10F, 7/2 x 10F	5F		10F	
France 8	1/5F, 2/10F, 5/2 x 10F	5F		10F	
France 9	1/3 x 1F, 2/5F	1F		5F	
France 10	1/2 x 1F, 3/5F	1F		5F	
France 11	1/3 x 1F, 2/5F, 5/2 x 5F	1F		5F	
France 12	1/2 x 1F, 3/5F, 7/2 x 5F	1F		5F	
France ECA	1/3 X 1F, 2/5F, 5/2 X 5F	1F	10F	5F	
Canada	1/2 x 25¢, 3/$1.00	25¢		$1.00	
Swiss 1	1/1F, 6/5F	1F		5F	
Swiss 2	1/1F, 7/5F	1F		5F	
Swiss 3	1/1F, 8/5F	1F		5F	
Italy	1/500 lire	500 lire		500 lire	
UK 1	1/20P, 3/50P	20P		50P	
UK 2	2/20P, 5/50P	20P		50P	
UK ECA	1/20P, 3/50 P, 7/£1.00	£1.00	20P	50P	10P
UK Elec w/CCU	1/30P, 2/50P, 4/£1.00	£1.00		CCU	
Spain 1	1/100 peseta, 6/500 peseta	100 peseta		500 peseta	
Spain 2	1/100 peseta, 5/500 peseta	100 peseta		500 peseta	
Australia 1	1/3 x 20¢, 2/$1.00	20¢		$1.00	
Australia 2	1/5 x 20¢, 1/$1.00	20¢		$1.00	
Japan 1	1/100 yen	100 yen		100 yen	
Japan 2	2/100 yen	100 yen		100 yen	
Austria 1	1/5 schilling, 2/10 schilling	5 schilling		10 schilling	
Austria 2	1/2 x 5 schilling, 3/2 x 10 schilling	5 schilling		10 schilling	
Belgium 1	1/20F	20F		20F	
Belgium 2	3/20F	20F		20F	
Belgium 3	2/20F	20F		20F	
Belgium ECA	1/20F	50F	5F	20F	
Sweden	1/3 x 1 krona, 2/5 krona	1 krona		5 krona	
New Zealand 1	1/3 x 20¢	20¢		20¢	
New Zealand 2	1/2 x 20¢	20¢		20¢	
Netherlands	1/1HFI, 3/2.5HFI	1HFI		2.5HFI	
Finland	1/1 markka	1 markka		1 markka	
Norway	1/2 x 1 krone, 3/5 x 1 krone	1 krone		1 krone	
Denmark	1/2 x 1 krone, 3/5 krone, 7/2 x 5 krone	1 krone		5 krone	
Antillies	1/25¢, 4/1 guilder	25¢		1 guilder	
Hungary	1/2 x 10 forint, 3/2 x 20 forint	10 forint		20 forint	

If option desired is not shown above, use Custom pricing.

Custom Pricing

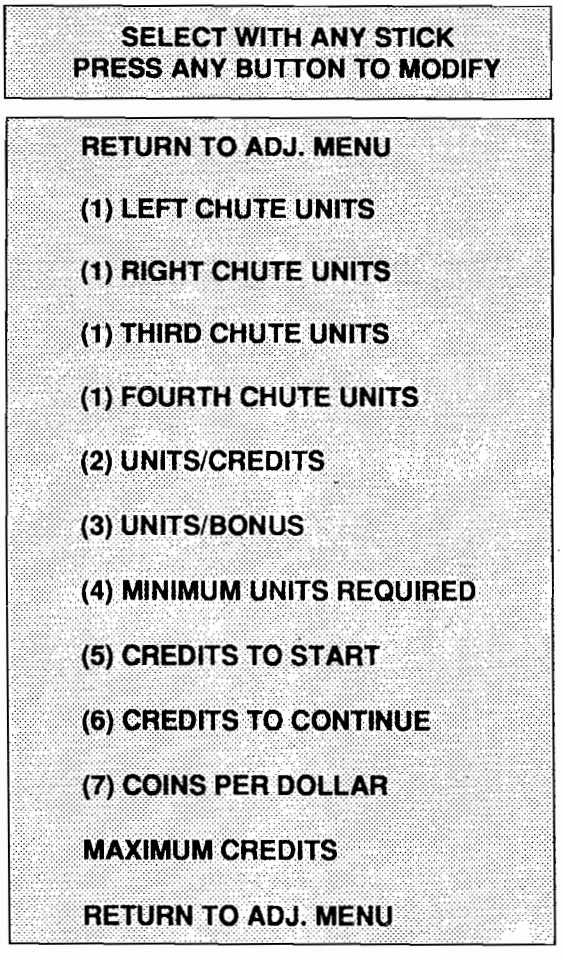

(1) Coins inserted accumulate units. This adjustment specfies the number of units given for each coin in the fourth chute (see "units/credit").

(2) This is the number of coin units required to buy one credit.

(3) One bonus credit is awarded after this many coin units have accumulated.

(4) No credits will be awarded until this many coin units have accumulated.

(5) Each player needs this many credits to begin a game.

(6) Each player needs this many credits to continue a game.

(7) The detailed bookkeeping screen shows total collections based on this many coins per dollar. (Set to zero to disable the display of money totals.)

(8) This is the limit for the credits counter. Additional coins inserted will be lost (factory setting: 30).

UTILITIES

Move any joystick to select the Utilities option on the Main Menu, then press any control panel button to activate it.

The Utilities Menu allows the owner/operator to clear the game's bookkeeping memory and to install a custom message.

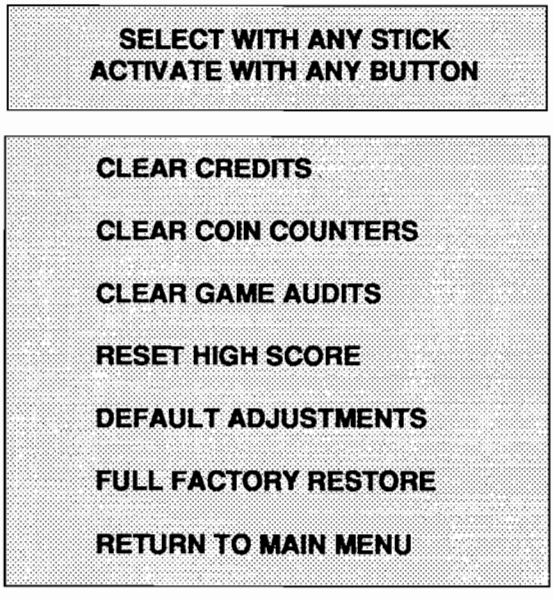

UTILITIES MENU

Move any joystick to select an item from the Utilities Menu, then press any control panel button to activate that item. After an item has been activated, you are given the option of resetting it or not.

For example:

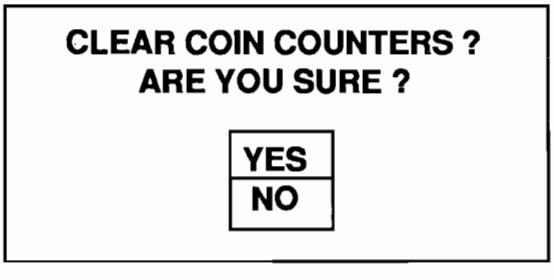

Move any joystick to choose YES or NO, then press any control panel button to lock in your choice and to return to the Utilities Menu.

To exit the Utilities Menu, move any joystick to select RETURN TO MAIN MENU, then press any control panel button to activate your selection.

VOLUME ADJUST

Move any joystick to select the Volume Adjust option on the Main Menu, then press any control panel button to activate it.

The Volume Adjust allows the operator to control the audio level of the game.

Use any joystick, or the volume buttons, to adjust the volume to the desired level. The scale on the screen shows the volume level.

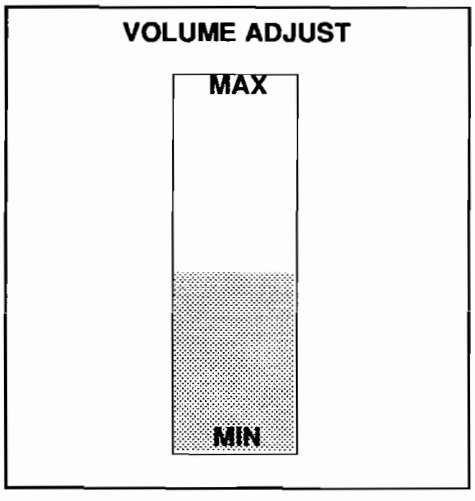

Press any button to return to the Main Menu.

Troubleshooting

Problem	Possible Solution
No Picture or Distorted Picture.	Check for faulty video board or monitor. Check for disconnected video signal cable.
Turn game On and nothing happens.	Check line fuse. Check for +5Vdc at pins C, D, 3, and 4 of the JAMMA Connector.
No sound.	Check the speaker and speaker connection to pins L and 10 on the JAMMA Connector. Check volume control setting. Check for +12V dc at pins F and 6 on the JAMMA Connector. Check interboard wiring from CPU Board to the Sound Board. Also, check for -5V.
No General Illumination.	Check the 1A., S.B. fuse.
Move joystick and the screen player does not move.	Check for open wires between the joystick and CPU Board. Check for contamination on joystick switch contacts and CPU Board pins. Check for proper ground.
Press Start Button and nothing happens.	Check for open wires between the button and CPU Board. Check for contamination on CPU Board pins or the button switch blade contacts. Check for proper ground.
Press any control panel button and screen player does not move.	Check for open wires between the button and CPU Board. Check for contamination on CPU Board pins or the button switch blade contacts. Check for proper ground.
No credit given when coins are inserted.	Check DIP switch coin setting. Check for contamination on coin switch contacts. Check for an open wire between Coin Switch 1 and pin 16 on the JAMMA Connector or Coin Switch 2 and pin T of the JAMMA Connector.
Too many credits for number of coins inserted.	Check Game Pricing setting. Check for a short between pins T & 16 on the JAMMA Connector.
Game stays in test mode.	Check that the test switch on the DIP Switch is set to Off.

NOTES

MORTAL KOMBAT II

SECTION
two

Parts

Cabinet Hardware

Rear Door Assembly	A-16472-1
Lock Retainer Plate	01-7264
Upper Door Lack Cam	01-8989
Lock Plate	01-11285
Door Bracket	01-11291
20" Vent Hole Cover	03-7602
Door Cam Lock	20-6542-TB
Cabinet Assembly	A-16971-40029
Leg Leveler Plate	01-9155
Shaft Caster	02-4404
Leg Adjuster, 3.0"	08-7377
Caster Wheel	20-9627
Power Switch Plate Assembly	A-15924
Power Switch	5640-13250-00
Bezel & Instruction Card Set	A-17454-1
25" CRT Bezel	03-8497
Instruction Card	31-1834
Coin Door Assembly	09-50000-33
Bill Validator Cable	H-17438-2
Coin Meter with Diode	5580-13476-00
Glass Retainer Bracket	01-9607
20" Vent Hole Cover	03-7602
Lamp Lock	03-8327
Glass Edge Channel	03-8358
Clear Glass	08-7456-4
Clear Glass	08-7456-10
TAG Special Wrench	16-9074
Toggle Latch	20-9347
Long Arm Key T-20	20-9620
#555 Bulb, 6.3V	24-8768
Marquee	31-1830
Marquee Retainer	03-8252-2

PC Boards

Always Replace PC Boards Exactly As Shown On Page 3-38.

Electronic Rack	A-17296-2
Power Supply	A-15202-1
T-Unit 2 CPU w/ Memory Expansion	A-17266-40029
DCS Sound Board	A-17319-40029

Control Panel

Housing & Control Panel Assembly	A-17293-2
Control Panel Assembly	A-17294-40029
Plate	A-17430
Control Panel Cable	H-17295-2
Security Latch Bracket	01-11955
Con. Panel Latch Brkt.	01-11996
Clear Overlay	03-9011
Red Pushbutton	20-9687-1
White Pushbutton	20-9687-2
Blue Pushbutton	20-9687-3
8-way Joystick	20-9694-1
Screened Overlay	31-1828
Housing w/hinge	A-17429-40029
Toggle Latch	20-9347

Fluorescent Lamp Assembly

Fluorescent Housing & Bracket	A-15890
Fluorescent Lamp Cable	H-16303
Starter	20-8748-1
Ballast	20-8749-8
Lamp Holders	20-9788
Starter Socket	20-9789
18" Fluorescent Bulb, 15W	24-8809

Speakers

Speaker & Cap Assembly	A-14968
Speaker Cable	H-17352
Piezo Speaker Cable	H-17433
Speaker Grille	01-11859
Cap. 10µf, non-pol, 50V,20%	5045-12914-00
Tweeter Speaker, 4Ω, 15W	5555-12924-00
6" Speaker, 4Ω, 25W	5555-12929-00

Transformer Assembly

Power Pack Assembly	A-15916
Power Pack Chassis Assy	A-15915
Line Cord Assembly	A-15921
Power Pack Jumper Cable	H-13265
Transformer Jumper Cable	H-13378
Line Filter Jumper Cable	H-15922
G.I. Jumper Cable	H-15945
Varistor, 130V, 10J	5017-09044-00
Line Filter, 5 Amp	5102-10310-00
Power Transformer	5610-13326-00
Fuse, SB, 1A, 250V	5731-06569-00
Fuse, SB, 3A, 250V	5731-10356-00
Fuse Holder, Panel	5733-12869-00

Cables

Power Pack Jumper	H-13265
Transformer Jumper	H-13378
AC "Y" Cable	H-14004
Switch Power Cable	H-15203
Line Filter Jumper Cable	H-15922
G.I. Jumper Cable	H-15945
Fluorescent Lamp Cable	H-16303
Dixie Narco Cable	H-17019
Control Panel Cable	H-17295-2
Main Harness Cable	H-17297-2
Speaker Cable	H-17352
Piezo Cable	H-17433
Bill Validator Cable	H-17438-2
Sound Power Speaker Cable	H-17442-2
Line Voltage Cable	H-17507-2
20-pin Ribbon Cable	5795-10937-18

Monitor

Monitor Support Bracket	01-10819
25" Monitor	5675-12787-04

Manuals

Instruction Manual	16-40029-101
DBV Installation Instructions	16-9637

A-15202-1
Power Supply Switcher Assembly

Part Number	Description
H-15203	Switch Power Cable
01-10500	Mounting Bracket
01-10573	Shield
20-9920	P/S Switcher Supply

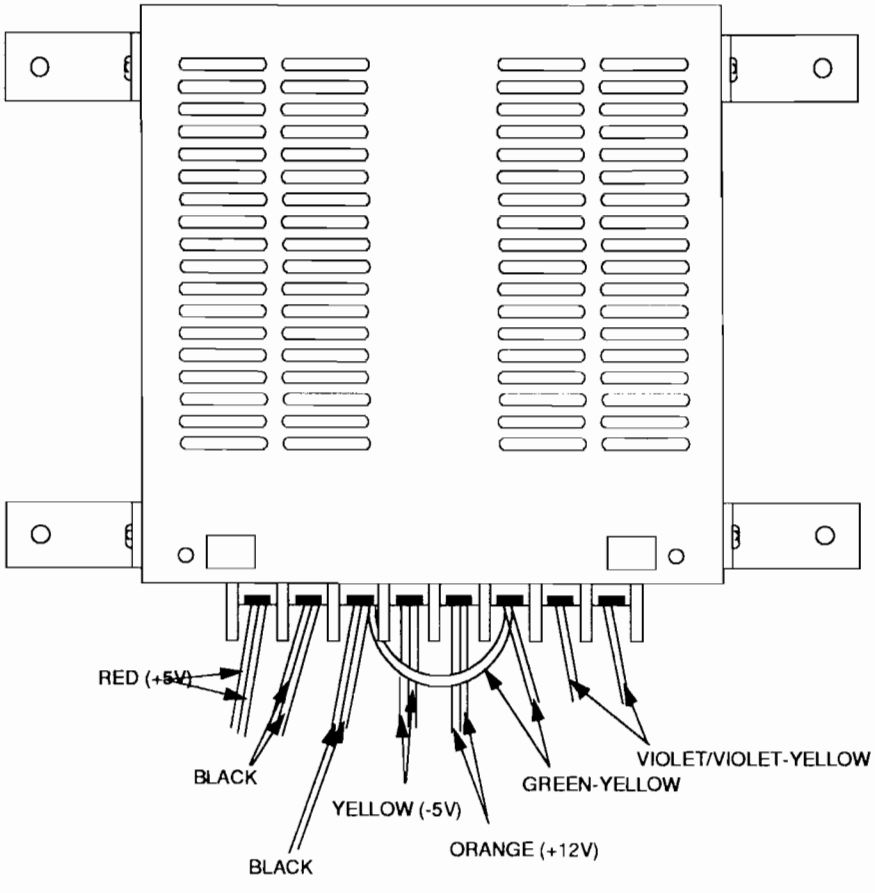

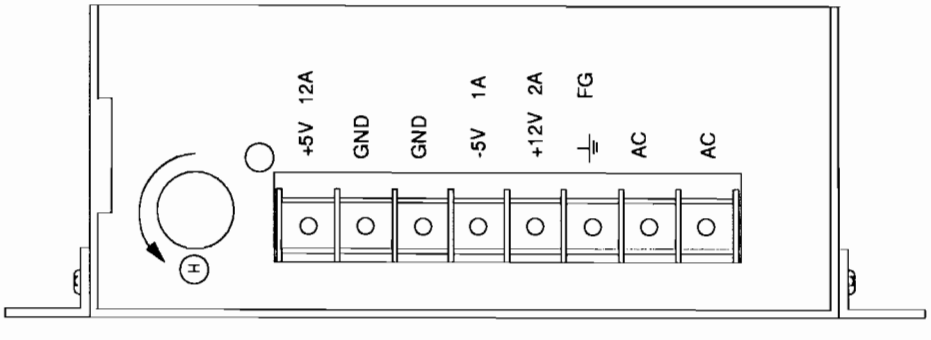

A-17265-40029
CPU Board Assembly

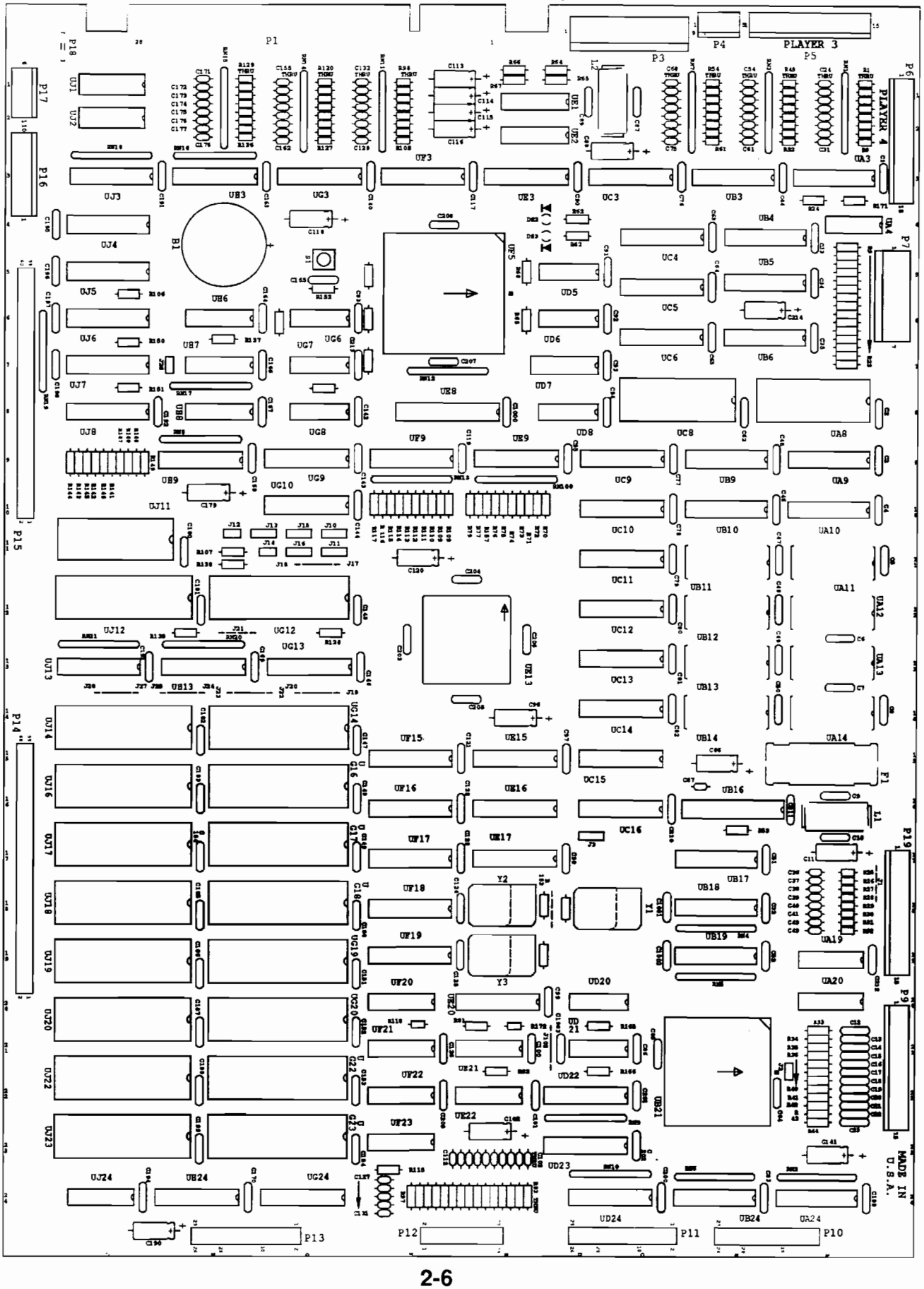

A-17265-40029
CPU Board Parts

Part Number	Part Designator	Description
5434-12255-00	UH6	IC, MAX691
5370-12602-00	UE1	IC, ULN2064
5340-12958-00	UE22, UF22, UF23	IC, 26LS31
5340-12959-00	UE21, UF20, UF21	IC, 26LS32A
5340-13020-00	UJ4, UJ5, UJ6, UJ7	IC, 44C256
5340-12558-00	UJ11	IC, 5565
5340-13322-00	UA8, UC8	IC, 5C2568
5283-10551-00	UG8	IC, 74F00
5283-10552-00	UD6	IC, 74F04
5281-09215-00	UD8	IC, 74LS04
5280-09309-00	UA4	IC, 7407
5283-12488-00	UG6	IC, 74F08
5281-09500-00	UD20	IC, 74LS32
5321-13466-00	UD21	IC, 74AC74
5281-09737-00	UD5	IC, 74LS86
5281-09745-00	UH8	IC, 74LS138
5281-13438-00	UH7	IC, 74LS155A
5281-09733-00	UE2	IC, 74LS174
5320-13437-00	UD22	IC, 74ACTQ244
5283-12890-00	UB24, UD23	IC, 74F244
5281-09867-00	UG9	IC, 74LS244
5320-13436-00	UB18, UB19	IC, 74ACTQ245
5317-12208-00	UB6, UC6, UC11, UC12, UC13, UC14, UE15, UE16, UF15, UF16, UH9, UH13, UJ8, UJ13	IC, 74ALS245
5283-12889-00	UA24, UD24	IC, 74F245
5283-13319-00	UD7	IC, 74F253
5283-13320-00	UB9, UF9, UF18, UG10	IC, 74F373
5281-09486-00	UA9, UA10, UB5, UB10, UC5, UC9, UC10, UC15, UC16, UE17, UE20, UF19, UG13	IC, 74LS374
5317-12211-00	UB4, UC4	IC, 74ALS541
5315-13435-00	UA3, UB3, UC3, UE3, UF3, UG3	IC, 74HCT541
5281-12887-00	UE9, UH3, UJ3	74LS541
5521-13424-03	UE19	8MHz Oscillator
5521-13424-01	UD18	50MHz Oscillator
5645-09025-00	SW1, SW2	DIP, 8-switch
5010-13364-00	R70-R77, R79, R106, R108-R117, R140-R147, R149, R150	33 Ω Res. 5%, 1/8W
5010-13363-00	R24, R69, R82-R97, R119, R128, R137, R148, R151, R171	100 Ω Res. 5%, 1/8W
5010-13372-00	R81	220 Ω Res. 5%, 1/8W
5010-13371-00	R62, R63, R66, R67	330 Ω Res. 5%, 1/8W
5010-13366-00	R45-R51, R54, R57, R58, R98-R105, R118, R120-R127, R129-R136, R172	470 Ω Res. 5%, 1/8W
5010-13361-00	R13, R14, R19	1K Ω Res. 2%, 1/8W
5010-13362-00	R12, R15, R20	2K Ω Res. 2%, 1/8W
5010-13368-00	R11, R16, R21	3.9K Ω Res. 5%, 1/8W
5010-13365-00	R53, R107, R138, R139, R152, R157, R165, R166	4.7K Ω Res. 5%, 1/8W
5010-13369-00	R10, R17, R22	8.2K Ω Res. 5%, 1/8W
5010-13370-00	R9, R18, R23	15K Ω Res. 5%, 1/8W
5019-09362-00	RN1-RN3, RN6, RN7,RN9-RN12, RN14-RN18,RN100	4.7K Ω Res SIP, 5%, 1/8W
5048-11030-00	C165	470pF Cap., 10%
5048-13375-00	C54-C60, C67, C68 C71, C72, C103-C112, C127-C139, C155-C162, C171-C178	100pF Cap.,10%
5048-11031-00	C87, C89	.001uF Cap., 10%
5043-08980-00	C1-C4, C9, C10, C32-C35,.C44-C46, C51-C53, C62-C65, C76-C86, C90-C95, C97-C101, C117, C119, C121-C126, C140, C142-C154, C163, C164, C166-C170, C180-C189, C191-C194, C199-C213, C1000	.01uF Cap.,
5043-08996-00	C5-C8, C47-C50, C195-C198,C1001-C1003	.1uF Cap., 20%
5040-09343-00	C11, C66, C88, C96, C102, C115, C116, C118, C120, C141, C179, C190, C214	10uF Cap., 20V
5671-13732-00	DS2, DS3	LED, Red
5551-09822-00	L2	4.7uH Coil, 3.0A
5880-11056-00	B1	Battery, Lithium 3.0V
5881-12315-00	B1	Battery Holder
5700-09915-00	UF17	20-pin Socket
5700-12047-00	UE8	24-pin Socket
5700-12088-00	UG12, UG14, UG16-UG20, UG22, UG23, UJ12, UJ14, UJ16-UJ20, UJ22, UJ23	32-pin Socket
5700-12253-00	UB21	68-pin Socket
5700-12424-00	UF5	84-pin Socket
5791-12461-05	P4	5-pin Header
5791-12461-06	P17	6-pin Header
5791-12461-10	P16	10-pin Header
5791-12461-15	P5	15-pin Header
5791-10862-07	P7	7-pin Header
5791-10862-09	P3	9-pin Header
5791-09437-00	P12	20-pin Header
5019-09669-00	RN4, RN5, RN13	1K Ω Res. 5%, 1/8W
5010-13472-00	J100, J101	47 Ω Res. 5%, 1/8W
5010-13473-00	R155	39 Ω Res. 5%, 1/8W
5010-13474-00	R158, R167-R170	68 Ω Res. 5%, 1/8W
5641-12551-00	S1	Sw-Push Button
5283-12489-00	UG7	IC, 74F32
5796-13836-00	P14, P15	60-pin Connector
5010-09534-00	J18, J19, J22, J24, J28, R154	0 Ω Res. Jumper
5400-12220-00	UB21	IC, TMS34010-50
A-16217	UE8	IC, 20L8
5410-13816-00	UF5	IC, 1020A-1
A-17480	UF17	IC, 16L8
A-5343-40029-18	UG12	EPROM
A-5343-40029-1	UG14	EPROM
A-5343-40029-5	UG16	EPROM
A-5343-40029-9	UG17	EPROM
A-5343-40029-13	UG18	EPROM
A-5343-40029-3	UG19	EPROM
A-5343-40029-7	UG20	EPROM
A-5343-40029-11	UG22	EPROM
A-5343-40029-15	UG23	EPROM
A-5343-40029-17	UJ12	EPROM
A-5343-40029-2	UJ14	EPROM
A-5343-40029-6	UJ16	EPROM
A-5343-40029-10	UJ17	EPROM
A-5343-40029-14	UJ18	EPROM
A-5343-40029-4	UJ19	EPROM
A-5343-40029-8	UJ20	EPROM
A-5343-40029-12	UJ22	EPROM
A-5343-40029-16	UJ23	EPROM
5410-12862-00	UE13	IC, DMA2
5340-13321-00	UA11-UA14, UB11-UB14	IC, 48121, 80nsec

Notes: 1. See Section 3 For Schematic; .2 * = Not for individual sale.

A-17264-40029
Memory Expansion Board Assembly

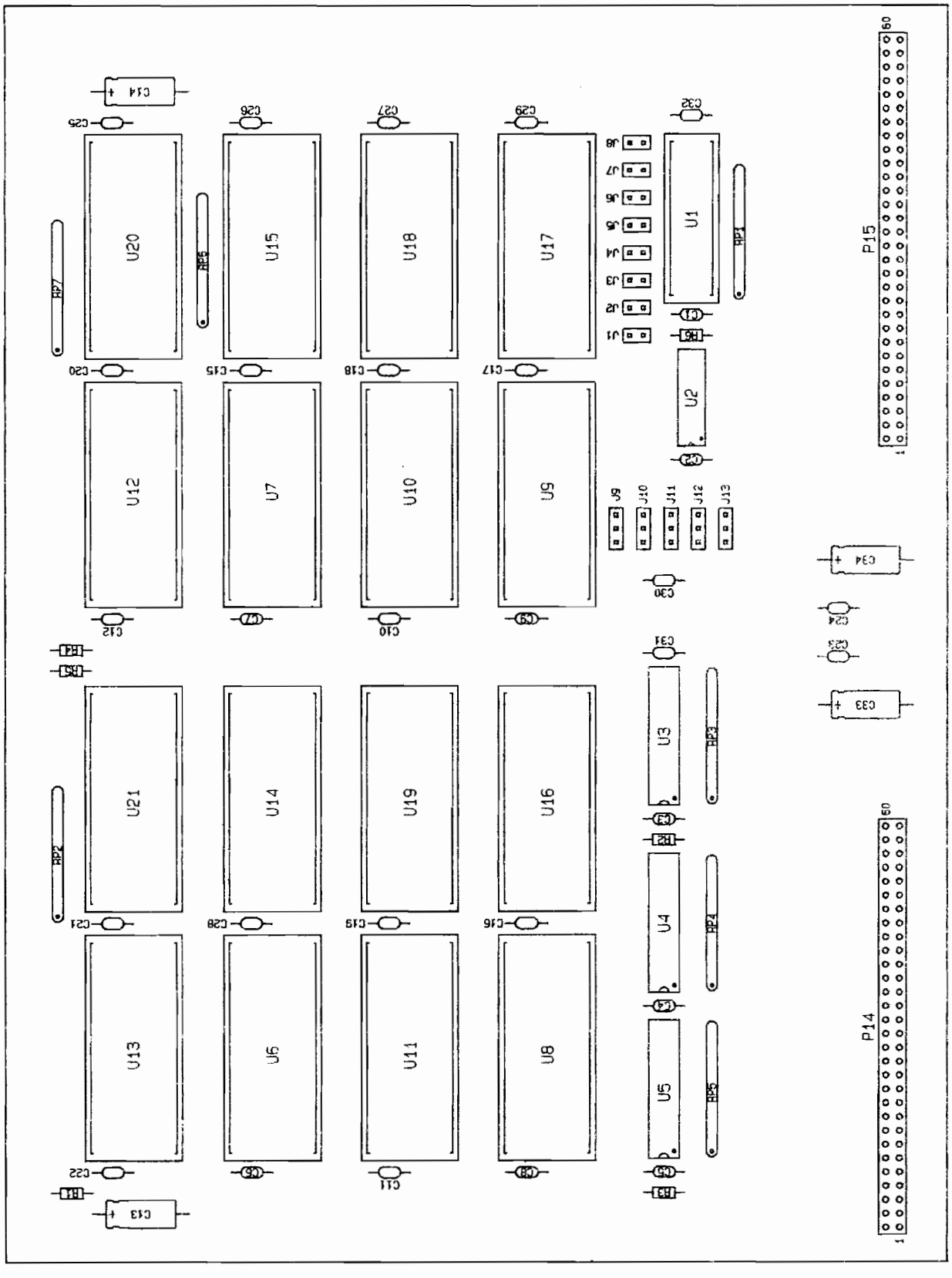

A-17264-40029
Memory Expansion Board Parts

Part Number	Part Designator	Description
5043-08980-00	C1-C12, C15-C32	01µf Cap. 50V
5040-09343-00	C13, C14, C33, C34	10µf Cap. 16V
5010-13365-00	R1, R6	4.7KΩ Res. 1/8W, 5%
5010-13363-00	R2-R5	100Ω Res. 1/8W, 5%
5019-09367-00	RP3-RP7	4.7Ω SIP Res. 9R, 10 pin
5320-13437-00	U3-U5	IC, 74ACTQ244
5700-12088-00	U6-U21	32-pin Socket, .600
5796-13837-00	P14, P15	60-pin Connector Header
A-5343-40029-19	U8	EPROM
A-5343-40029-20	U9	EPROM
A-5343-40029-21	U6	EPROM
A-5343-40029-22	U7	EPROM
A-5343-40029-23	U11	EPROM
A-5343-40029-24	U10	EPROM
A-5343-40029-25	U13	EPROM
A-5343-40029-26	U12	EPROM

A-17319-40029
Sound Board Assembly

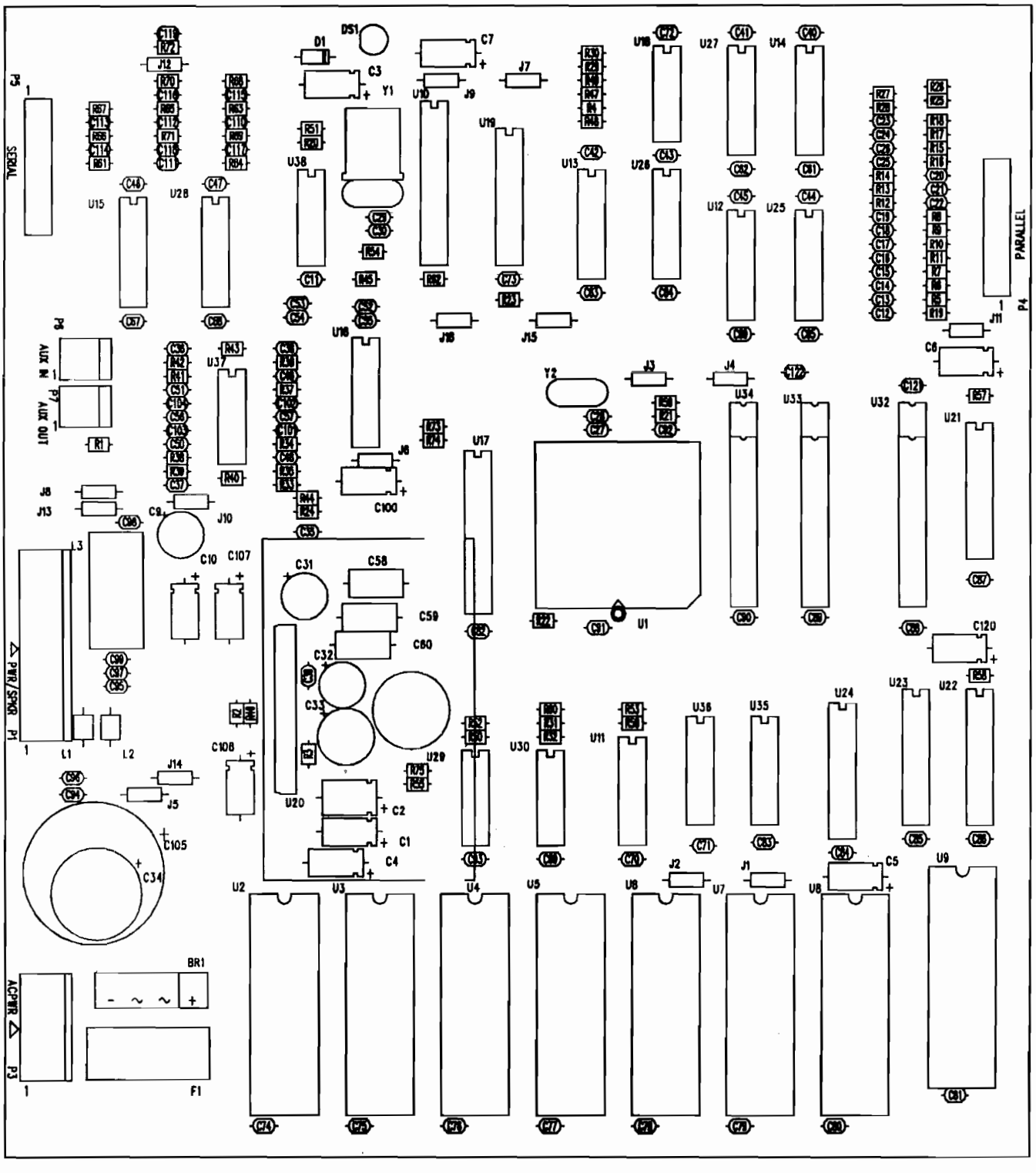

A-17319-40029
Sound Board Parts

Part Number	Part Designator	Description
20-9915	J5, J8, J10, J13	Wire Insulated Jumper
5010-09534-00	J1, J4, J6, J7, J15	0Ω Res., 1/4W
5010-13363-00	R45, R48, R49, R51, R57-R60	100Ω Res., 5%
5010-13365-00	R21-R23, R25-R29, R31, R32, R50, R53, R55, R56, R73-R75	4.7KΩ Res., 5%
5010-13366-00	R4	470Ω Res., 5%
5010-13371-00	R52	330Ω Res., 5%
5010-13372-00	R47	220Ω Res., 5%
5010-13472-00	R5-R19	47Ω Res., 5%
5010-13361-00	R1	1KΩ Res., 1/8W, 2%
5013-13842-00	R33-R44	6.19KΩ Res., 1%
5010-13841-00	R24	47KΩ Res., 5%, 200V
5010-13844-00	R3, R20	100KΩ Res., 5%, 200V
5010-13858-00	R2	820Ω Res., 1/8W, 5%
5010-13370-00	R46	15KΩ Res., 1/8W, 5%
5040-09332-00	C2	47µf Cap., ±20%, Axial
5040-09343-00	C1, C2, C4-C7, C10, C100, C106, C107, C120	10µf Cap., ±20%, Axial
5043-08980-00	C39-C45	.01µf Cap., +80%/-20%, Axial
5043-08996-00	C3, C52-C57, C61-C61, C69-C99, C121, C122	.1µf Cap., ±20%, Axial
5045-12926-00	C58-C60	.1µf Cap., ±10%, Axial Film
5048-11028-00	C27, C28	22pf Cap., ±20%, Axial
5048-13375-00	C11-C26	100pf Cap., ±20%, Axial
5048-13608-00	C51	6800pf Cap., 5%, Axial
5048-13609-00	C48-C50	3900pf Cap., 5%, Axial
5048-13610-00	C35-C38	1000pf Cap., ±20%, Axial
5048-13611-00	C101-C104	680pf Cap., ±20%, Axial
5070-08919-00	D5	Diode, 1N4148
01-10516		Heat Sink

Part Number	Part Designator	Description
5280-08974-00	U29	IC, 7406
5281-09486-00	U19	IC, 74LS374
5281-09487-00	U18	IC, 74LS74
5283-10551-00	U30	IC, 74F00
5311-10948-00	U11	IC, 74HC138
5311-12043-00	U35, U36	IC, 74HC174
5311-12287-00	U21-U23	IC, 74HC541
5311-12538-00	U38	IC, 74HC14
5320-13436-00	U24	IC, 74ACTQ245
5340-12958-00	U25-U27	IC, 26LS31
5340-12959-00	U12-U14	IC, 26LS32A
5340-13304-00	U32-U34	IC, SRAM, 2Kx8
5370-12730-00	U37	IC, TL084
5370-13308-00	U20	IC, MB3731 SIP
5371-13299-00	U16	IC, AD1851
5520-13301-00	Y2	10MHz Crystal
5551-09822-00	L3	4.7µH Inductor
5556-12513-00	L1, L2	Ferrite Bead
5671-13732-00	DS1	Display LED, Red
5700-12088-00	U2-U9	32-pin Socket
5700-12253-00	U1	68-pin Socket
5700-12047-00	U17	24-pin Socket
5791-09437-00	P4	100 C 10 x 2
5791-10862-02	P6, P7	2H Str Sq Pin .156
5791-10862-05	P3	5H Str Sq Pin .156
5791-10862-09	P1	9H Str Sq Pin .156
5400-13298-00	U1	IC, ADSP2105 PLCC
A-17481	U17	IC, PLD GAL20V8, 25ns
A-5343-40029-35	U2	EPROM
A-5343-40029-36	U3	EPROM
A-5354-40029-37	U4	EPROM
A-5343-40029-38	U5	EPROM
A-5343-40029-39	U6	EPROM
A-5343-40029-40	U7	EPROM

NOTES

MORTAL KOMBAT II

SECTION
three

Schematics and Wiring Diagrams

Cabinet Wiring Diagram

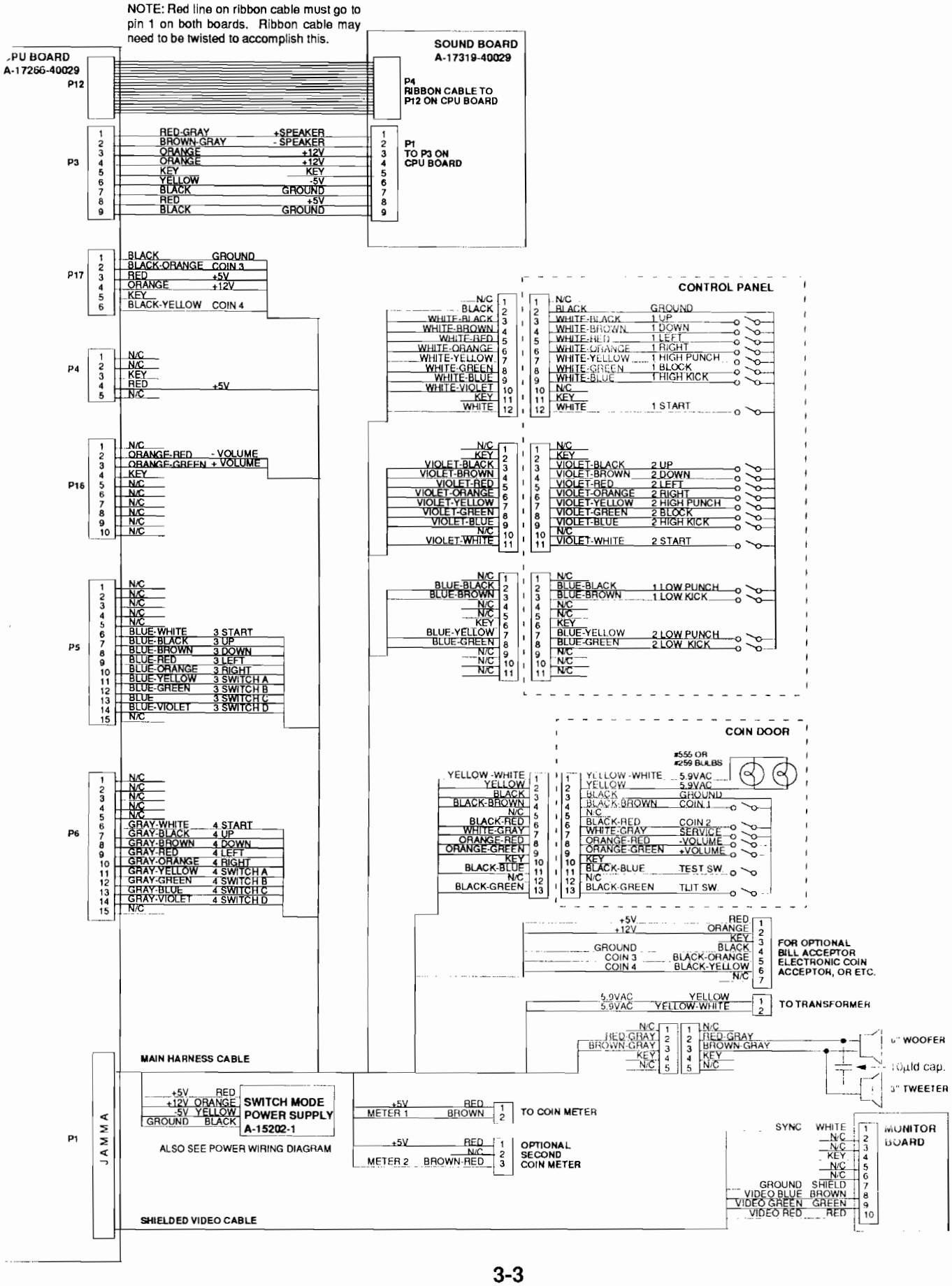

Power Wiring Diagram

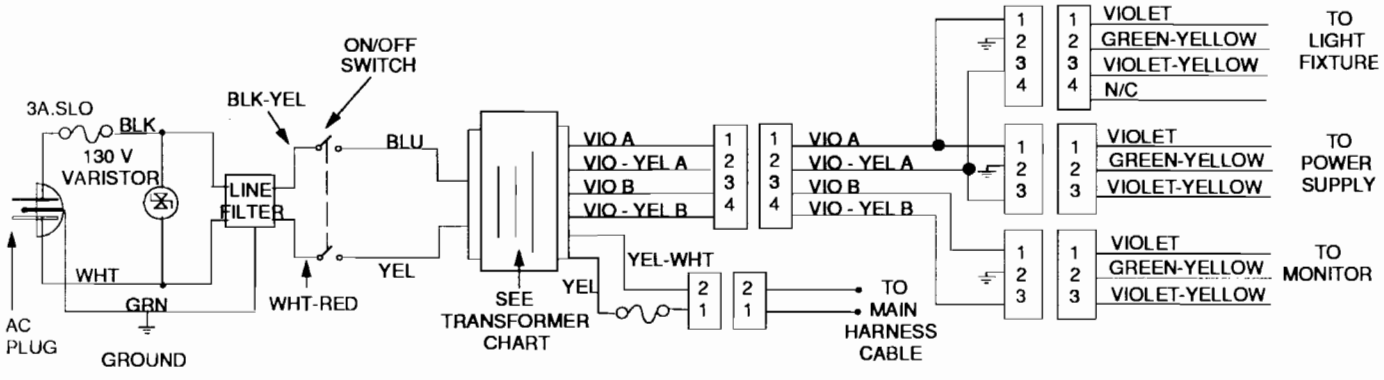

NOTE: FOR 230VAC OPERATION:
1. FUSE IS 2.0A SLOW BLOW.
2. VARISTOR IS 250V.

Transformer Chart

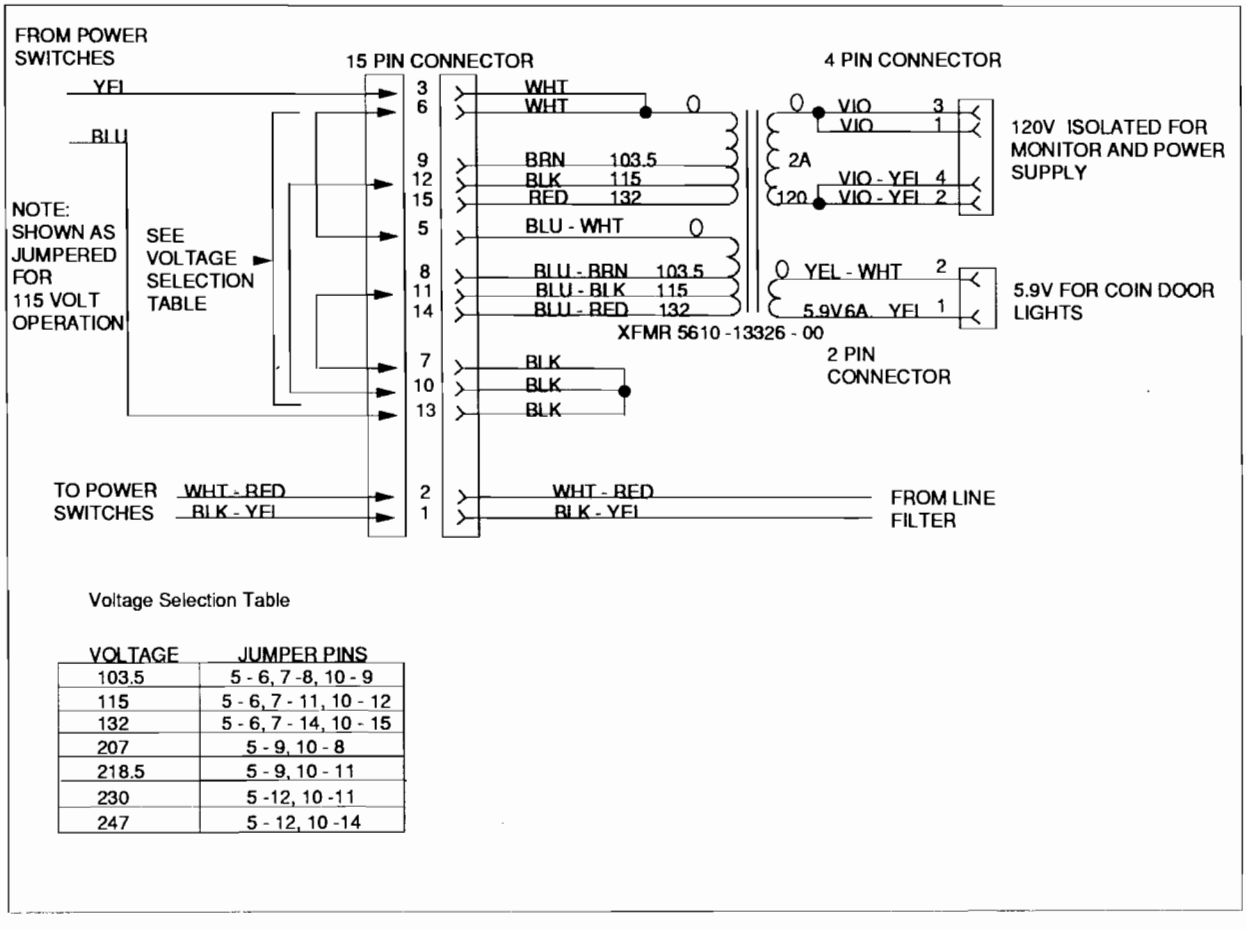

Voltage Selection Table

VOLTAGE	JUMPER PINS
103.5	5 - 6, 7 -8, 10 - 9
115	5 - 6, 7 - 11, 10 - 12
132	5 - 6, 7 - 14, 10 - 15
207	5 - 9, 10 - 8
218.5	5 - 9, 10 - 11
230	5 -12, 10 -11
247	5 - 12, 10 -14

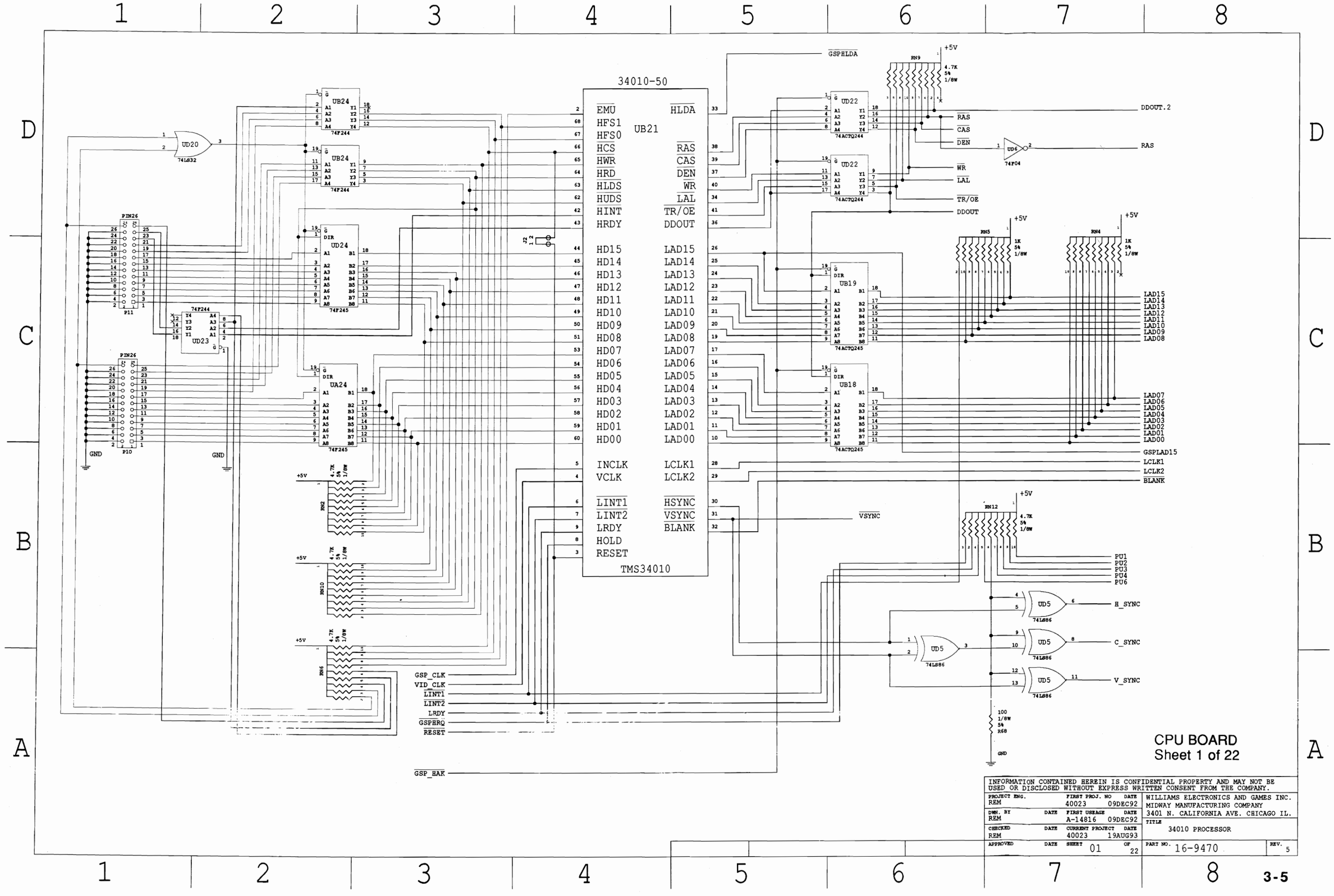

CPU BOARD
Sheet 1 of 22

INFORMATION CONTAINED HEREIN IS CONFIDENTIAL PROPERTY AND MAY NOT BE USED OR DISCLOSED WITHOUT EXPRESS WRITTEN CONSENT FROM THE COMPANY.

PROJECT ENG. REM	FIRST PROJ. NO 40023	DATE 09DEC92	WILLIAMS ELECTRONICS AND GAMES INC. MIDWAY MANUFACTURING COMPANY 3401 N. CALIFORNIA AVE. CHICAGO IL.
DWN. BY REM	DATE	FIRST USEAGE A-14816	DATE 09DEC92
CHECKED REM	DATE	CURRENT PROJECT 40023	DATE 19AUG93
APPROVED	DATE	SHEET 01	OF 22

TITLE: 34010 PROCESSOR

PART NO. 16-9470 REV. 5

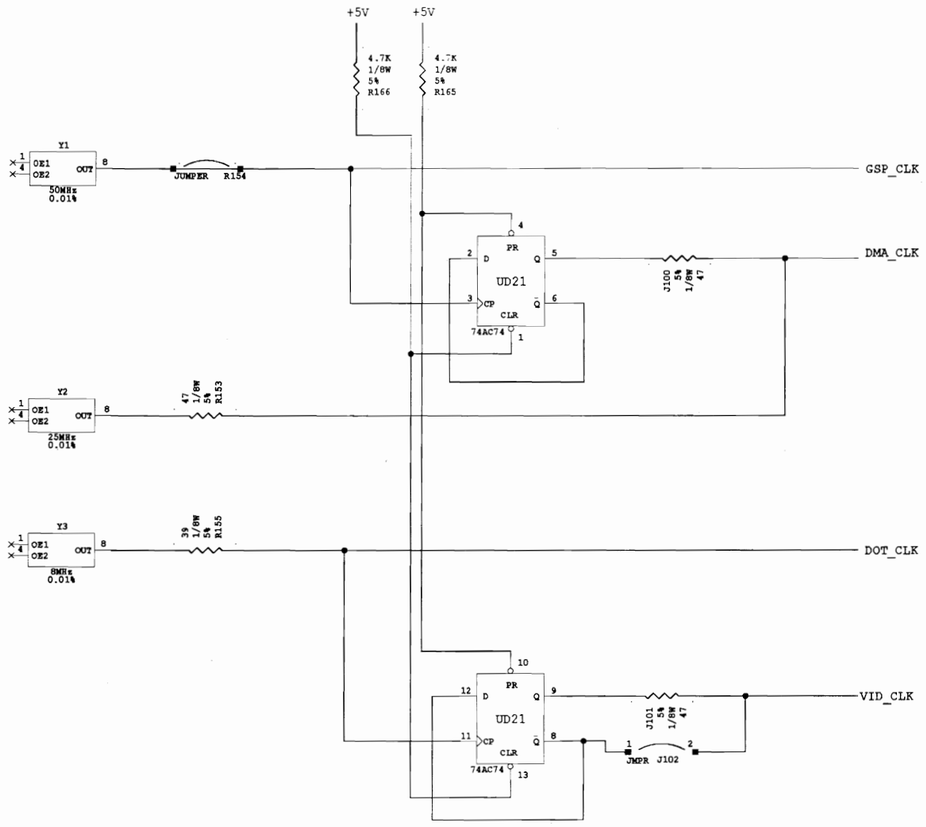

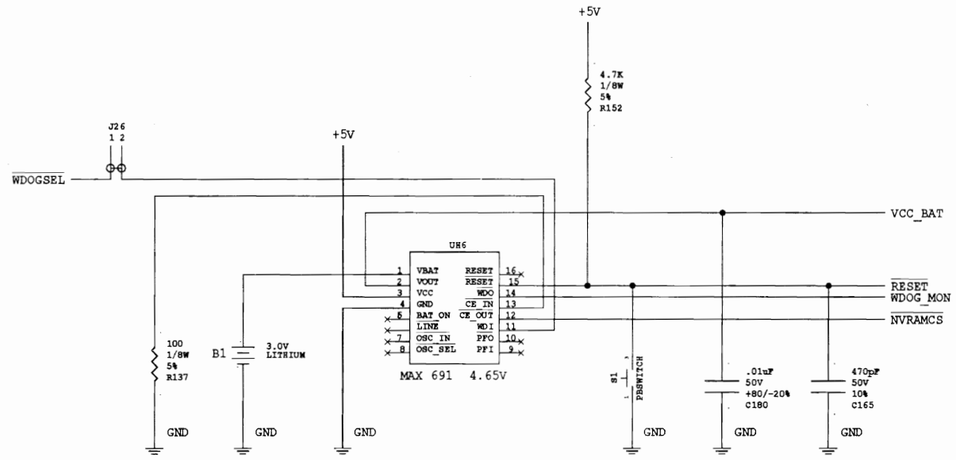

CPU BOARD
Sheet 2 of 22

INFORMATION CONTAINED HEREIN IS CONFIDENTIAL PROPERTY AND MAY NOT BE USED OR DISCLOSED WITHOUT EXPRESS WRITTEN CONSENT FROM THE COMPANY.

PROJECT ENG. REM	FIRST PROJ. NO 40023	DATE 09DEC92	WILLIAMS ELECTRONICS AND GAMES INC. MIDWAY MANUFACTURING COMPANY 3401 N. CALIFORNIA AVE. CHICAGO IL.
DWN. BY REM	DATE	FIRST USEAGE A-14816	DATE 09DEC92
CHECKED REM	DATE	CURRENT PROJECT 40023	DATE 19AUG93
APPROVED	DATE	SHEET 02	OF 22

TITLE: CLOCK GENERATION/POWER MONITOR

PART NO. 16-9470 REV. 5

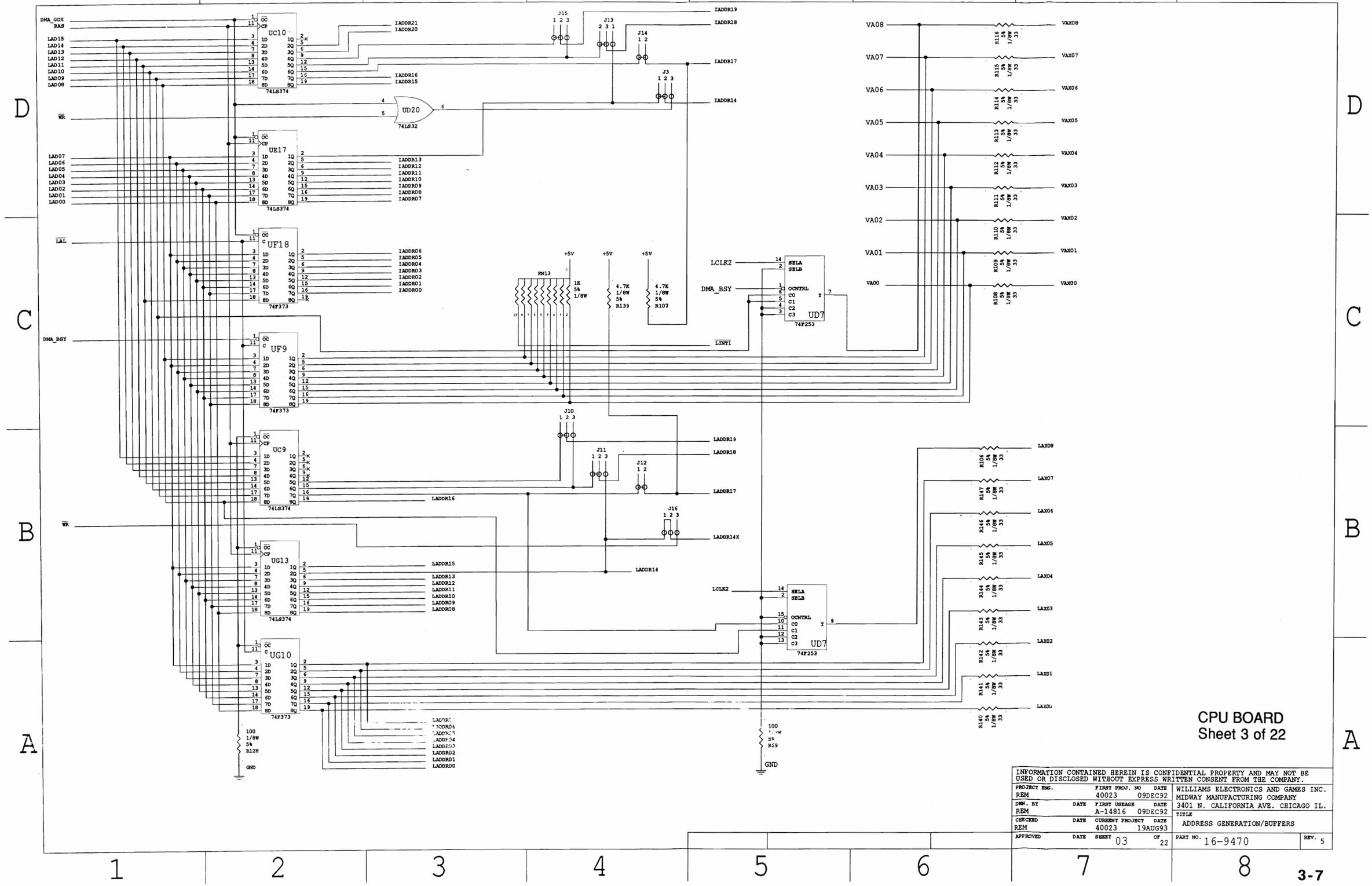

CPU BOARD
Sheet 3 of 22

INFORMATION CONTAINED HEREIN IS CONFIDENTIAL PROPERTY AND MAY NOT BE USED OR DISCLOSED WITHOUT EXPRESS WRITTEN CONSENT FROM THE COMPANY.

PROJECT ENG. REM	FIRST PROJ. NO 40023	DATE 09DEC92	WILLIAMS ELECTRONICS AND GAMES INC.
DWN. BY REM	DATE	FIRST USEAGE A-14816	DATE 09DEC92	MIDWAY MANUFACTURING COMPANY
CHECKED REM	DATE	CURRENT PROJECT 40023	DATE 19AUG93	3401 N. CALIFORNIA AVE. CHICAGO IL.
APPROVED	DATE	SHEET 03	OF 22	TITLE: ADDRESS GENERATION/BUFFERS
PART NO. 16-9470			REV. 5	

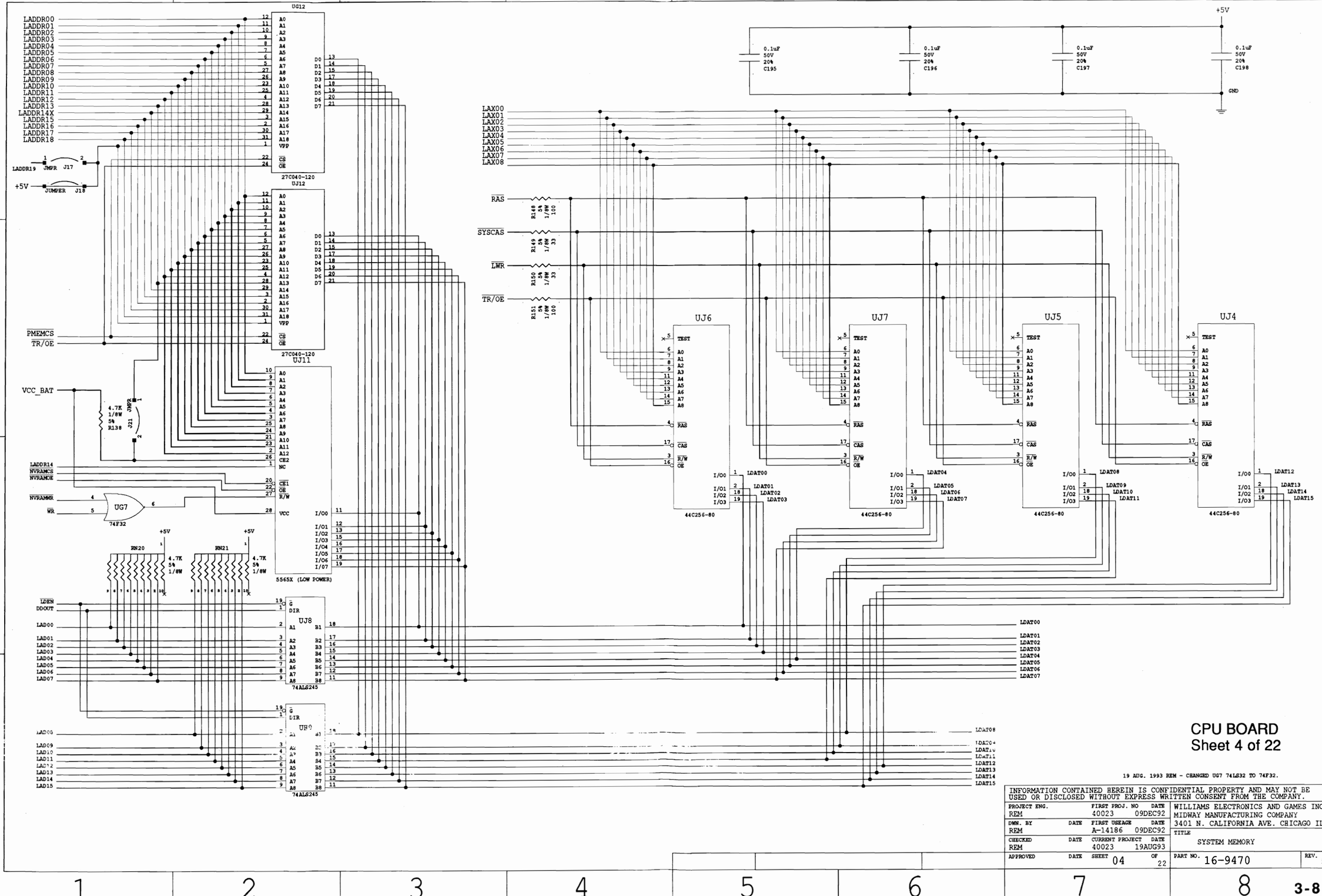

CPU BOARD
Sheet 4 of 22

19 AUG. 1993 REM - CHANGED UG7 74LS32 TO 74F32.

INFORMATION CONTAINED HEREIN IS CONFIDENTIAL PROPERTY AND MAY NOT BE USED OR DISCLOSED WITHOUT EXPRESS WRITTEN CONSENT FROM THE COMPANY.

PROJECT ENG. REM	FIRST PROJ. NO 40023	DATE 09DEC92	WILLIAMS ELECTRONICS AND GAMES INC. MIDWAY MANUFACTURING COMPANY 3401 N. CALIFORNIA AVE. CHICAGO IL.
DWN. BY REM	DATE	FIRST USEAGE A-14186	DATE 09DEC92
CHECKED REM	DATE	CURRENT PROJECT 40023	DATE 19AUG93
APPROVED	DATE	SHEET 04	OF 22

TITLE: SYSTEM MEMORY

PART NO. 16-9470 REV. 5

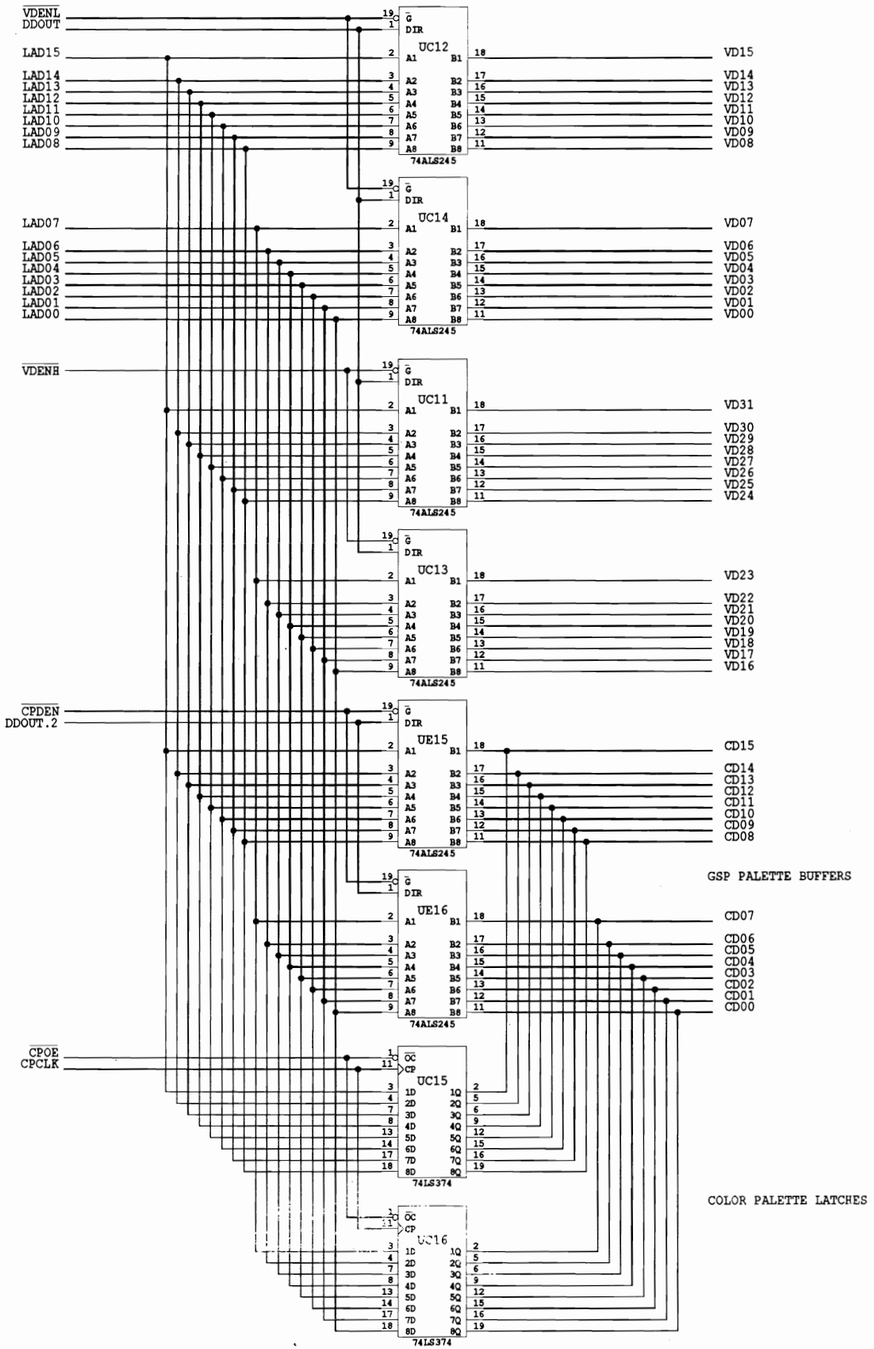

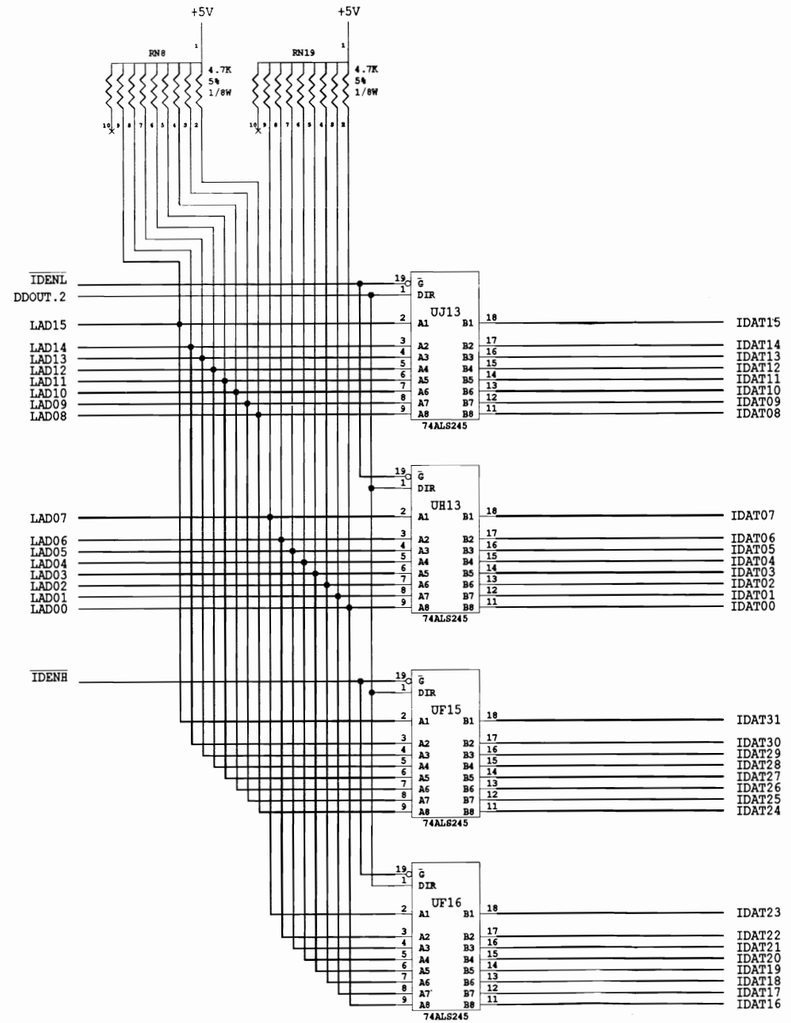

CPU BOARD
Sheet 5 of 22

INFORMATION CONTAINED HEREIN IS CONFIDENTIAL PROPERTY AND MAY NOT BE USED OR DISCLOSED WITHOUT EXPRESS WRITTEN CONSENT FROM THE COMPANY.

PROJECT ENG. REM	FIRST PROJ. NO 40023	DATE 09DEC92	WILLIAMS ELECTRONICS AND GAMES INC. MIDWAY MANUFACTURING COMPANY 3401 N. CALIFORNIA AVE. CHICAGO IL.
DWN. BY REM	DATE	FIRST USEAGE A-14816	DATE 09DEC92
CHECKED REM	DATE	CURRENT PROJECT 40023	DATE 19AUG93
APPROVED	DATE	SHEET 05	OF 22

TITLE: IMAGE/VIDEO MEMORY DATA BUFFERS

PART NO. 16-9470 REV. 5

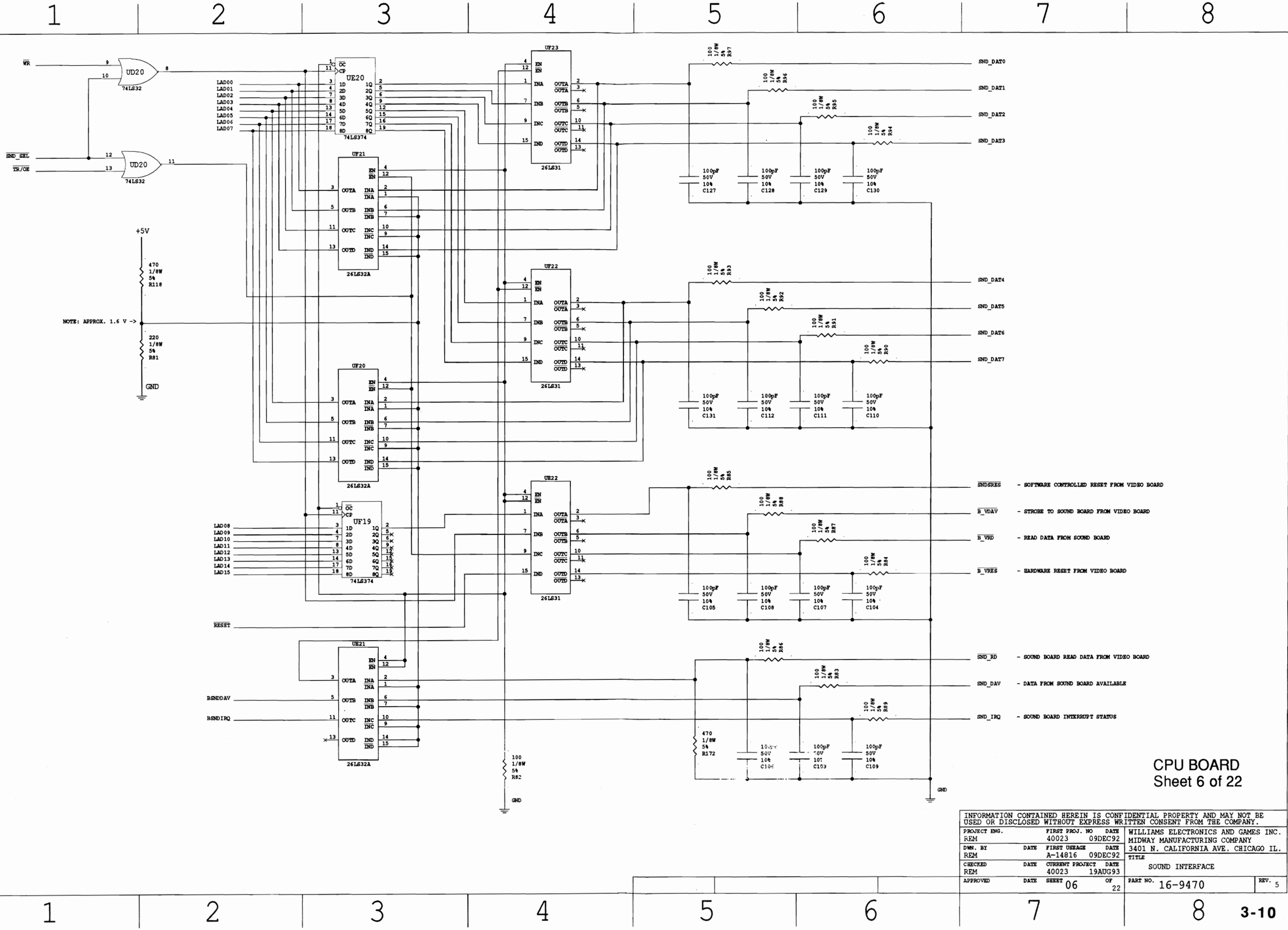

INFORMATION CONTAINED HEREIN IS CONFIDENTIAL PROPERTY AND MAY NOT BE USED OR DISCLOSED WITHOUT EXPRESS WRITTEN CONSENT FROM THE COMPANY.

PROJECT ENG. REM	FIRST PROJ. NO 40023	DATE 09DEC92	WILLIAMS ELECTRONICS AND GAMES INC. MIDWAY MANUFACTURING COMPANY 3401 N. CALIFORNIA AVE. CHICAGO IL.
DWN. BY REM	DATE	FIRST USEAGE A-14816	DATE 09DEC92
CHECKED REM	DATE	CURRENT PROJECT 40023	DATE 19AUG93
APPROVED	DATE	SHEET 06	OF 22

TITLE: SOUND INTERFACE

PART NO. 16-9470 REV. 5

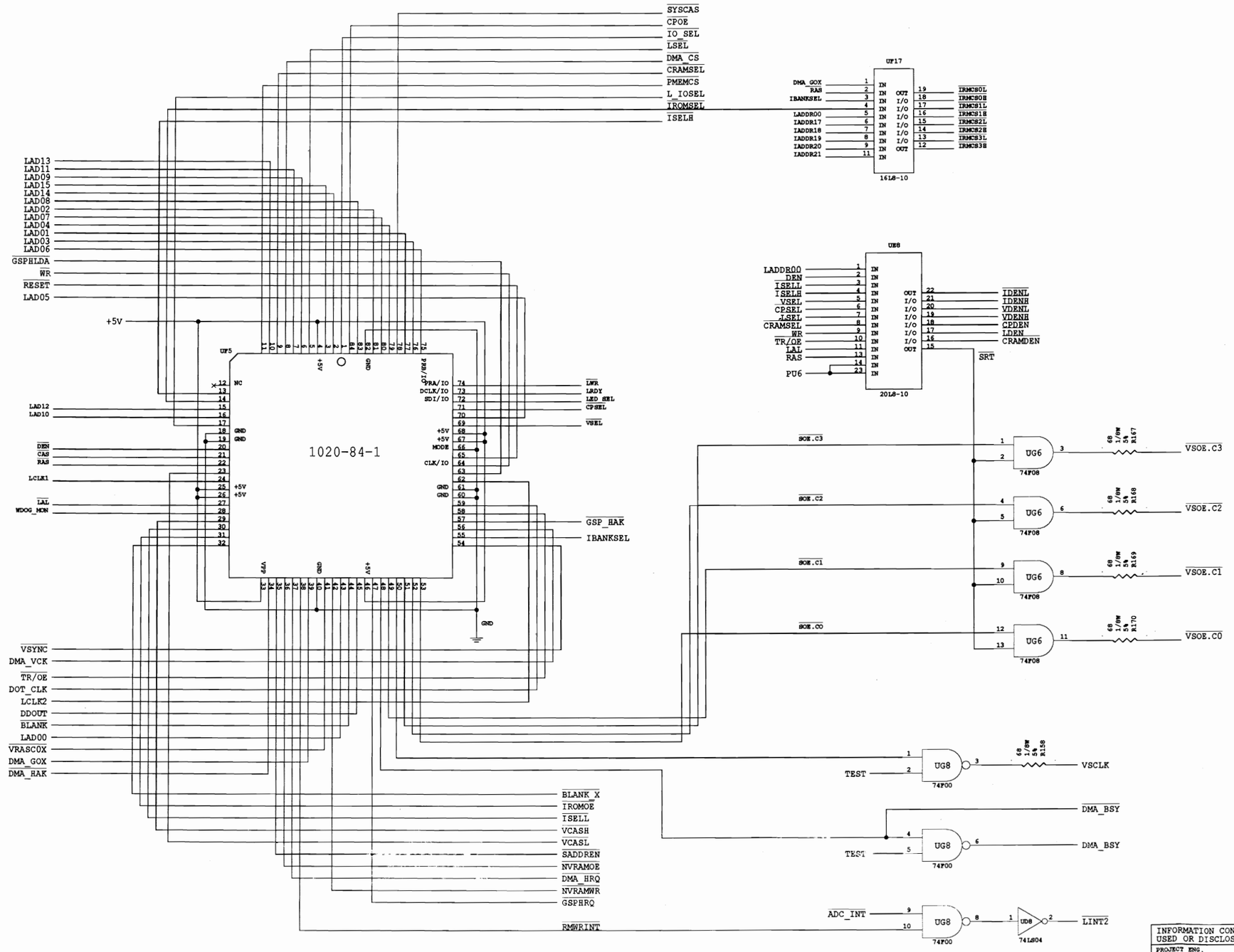

CPU BOARD
Sheet 7 of 22

INFORMATION CONTAINED HEREIN IS CONFIDENTIAL PROPERTY AND MAY NOT BE USED OR DISCLOSED WITHOUT EXPRESS WRITTEN CONSENT FROM THE COMPANY.

PROJECT ENG. REM	FIRST PROJ. NO 40023	DATE 09DEC92	WILLIAMS ELECTRONICS AND GAMES INC. MIDWAY MANUFACTURING COMPANY 3401 N. CALIFORNIA AVE. CHICAGO IL.
DWN. BY REM	DATE	FIRST USEAGE A-14816	DATE 09DEC92
CHECKED REM	DATE	CURRENT PROJECT 40023	DATE 19AUG93
APPROVED	DATE	SHEET 07	OF 22

TITLE: FPGA

PART NO. 16-9470 REV. 5

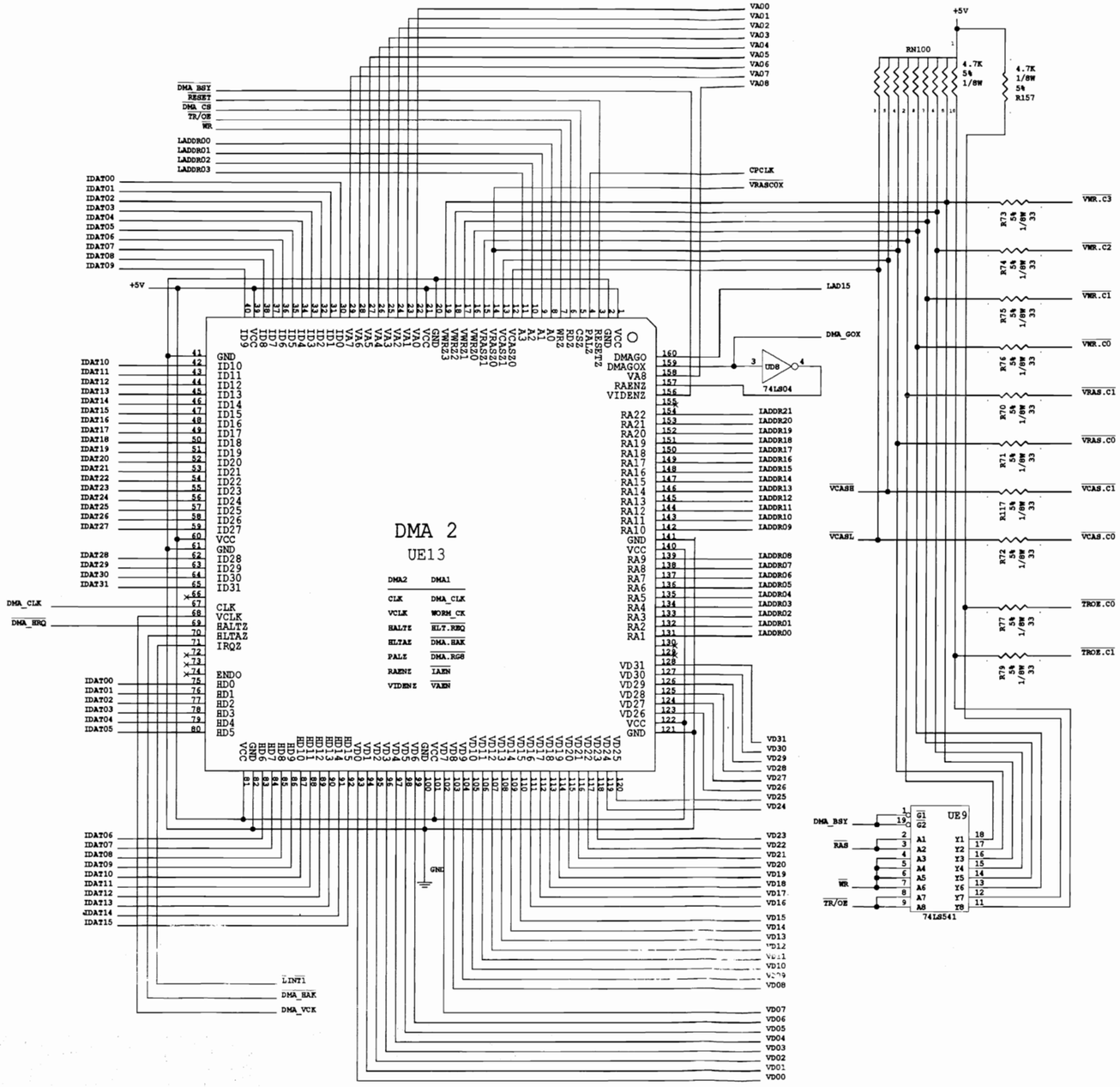

CPU BOARD
Sheet 8 of 22

INFORMATION CONTAINED HEREIN IS CONFIDENTIAL PROPERTY AND MAY NOT BE USED OR DISCLOSED WITHOUT EXPRESS WRITTEN CONSENT FROM THE COMPANY.

PROJECT ENG. REM	FIRST PROJ. NO 40023	DATE 09DEC92	WILLIAMS ELECTRONICS AND GAMES INC. MIDWAY MANUFACTURING COMPANY 3401 N. CALIFORNIA AVE. CHICAGO IL.
DWN. BY REM	DATE	FIRST USEAGE A-14816	DATE 09DEC92
CHECKED REM	DATE	CURRENT PROJECT 40023	DATE 19AUG93
APPROVED	DATE	SHEET 08	OF 22

TITLE: DMA

PART NO. 16-9470 REV. 5

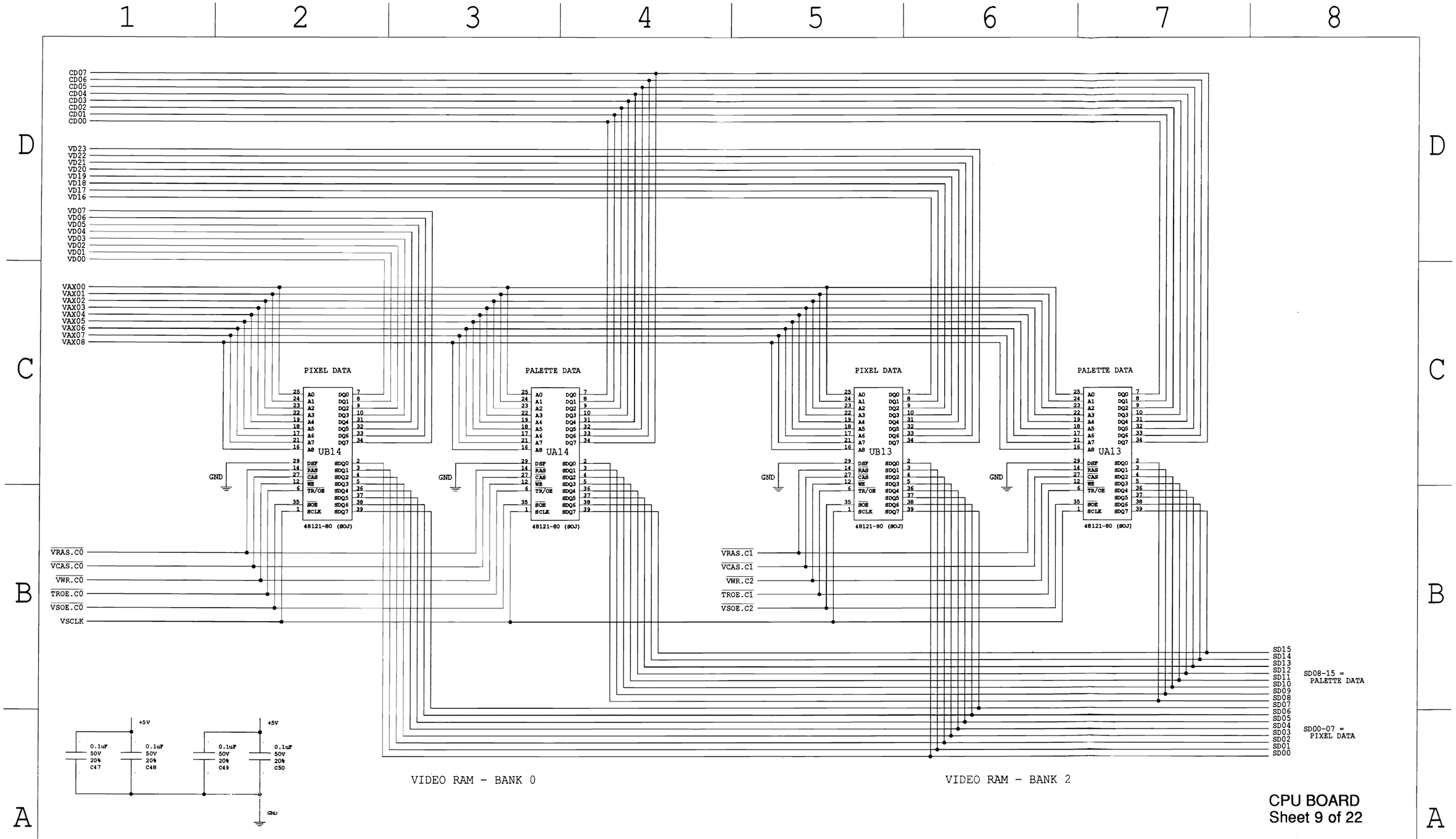

CPU BOARD
Sheet 9 of 22

INFORMATION CONTAINED HEREIN IS CONFIDENTIAL PROPERTY AND MAY NOT BE USED OR DISCLOSED WITHOUT EXPRESS WRITTEN CONSENT FROM THE COMPANY.

PROJECT ENG. REM	FIRST PROJ. NO 40023	DATE 09DEC92	WILLIAMS ELECTRONICS AND GAMES INC. MIDWAY MANUFACTURING COMPANY 3401 N. CALIFORNIA AVE. CHICAGO IL.
DWN. BY REM	DATE	FIRST USEAGE A-14816	DATE 09DEC92
CHECKED REM	DATE	CURRENT PROJECT 40023	DATE 19AUG93
APPROVED	DATE	SHEET 09	OF 22

TITLE: VIDEO RAM BANK 0/BANK 2

PART NO. 16-9470 REV. 5

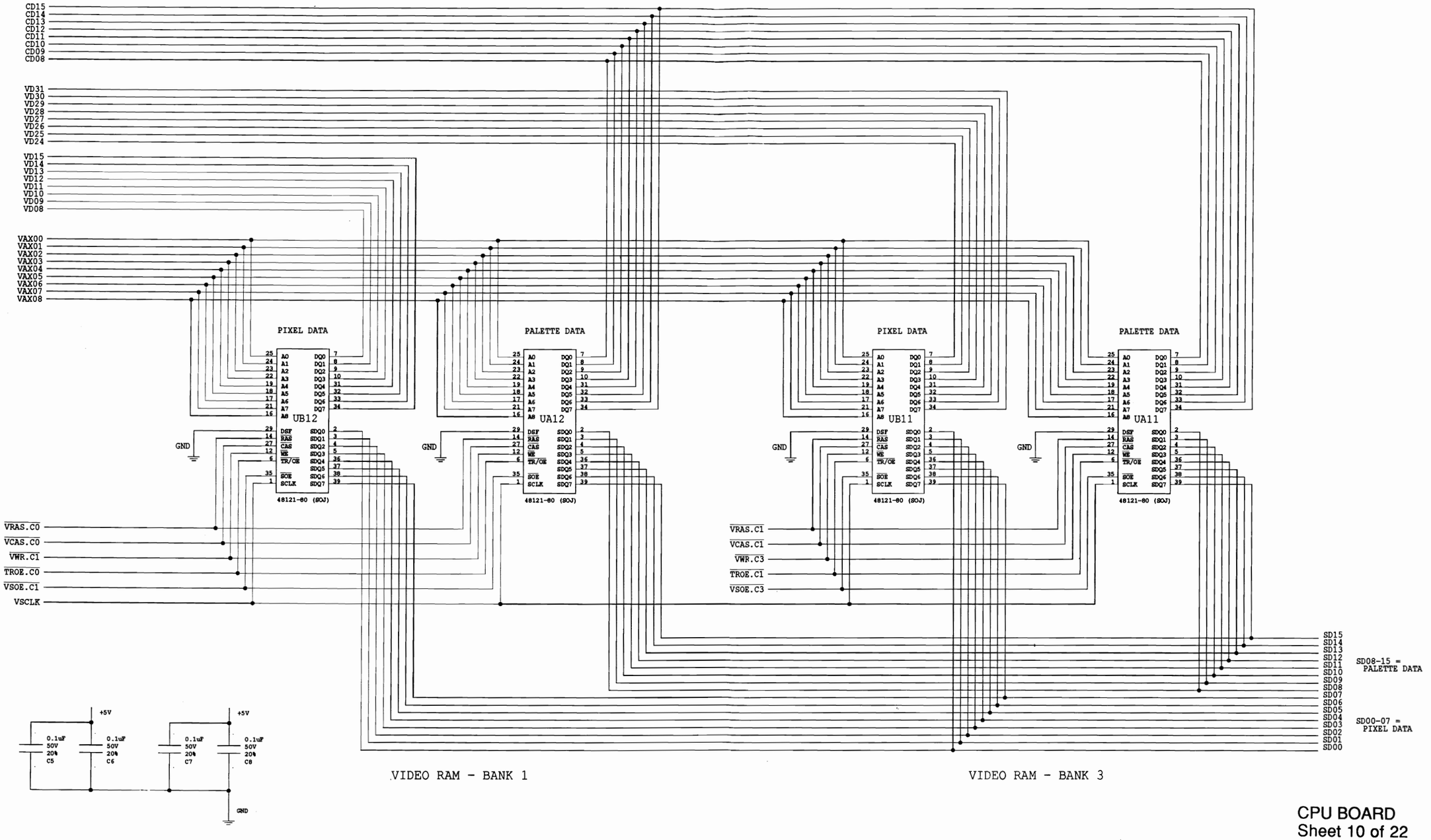

CPU BOARD
Sheet 10 of 22

INFORMATION CONTAINED HEREIN IS CONFIDENTIAL PROPERTY AND MAY NOT BE USED OR DISCLOSED WITHOUT EXPRESS WRITTEN CONSENT FROM THE COMPANY.

PROJECT ENG. REM		FIRST PROJ. NO 40023	DATE 09DEC92	WILLIAMS ELECTRONICS AND GAMES INC. MIDWAY MANUFACTURING COMPANY 3401 N. CALIFORNIA AVE. CHICAGO IL.	
DWN. BY REM	DATE	FIRST USEAGE A-14816	DATE 09DEC92	TITLE VIDEO RAM BANK 1/BANK 3	
CHECKED REM	DATE	CURRENT PROJECT 40023	DATE 19AUG93		
APPROVED	DATE	SHEET 10	OF 22	PART NO. 16-9470	REV. 5

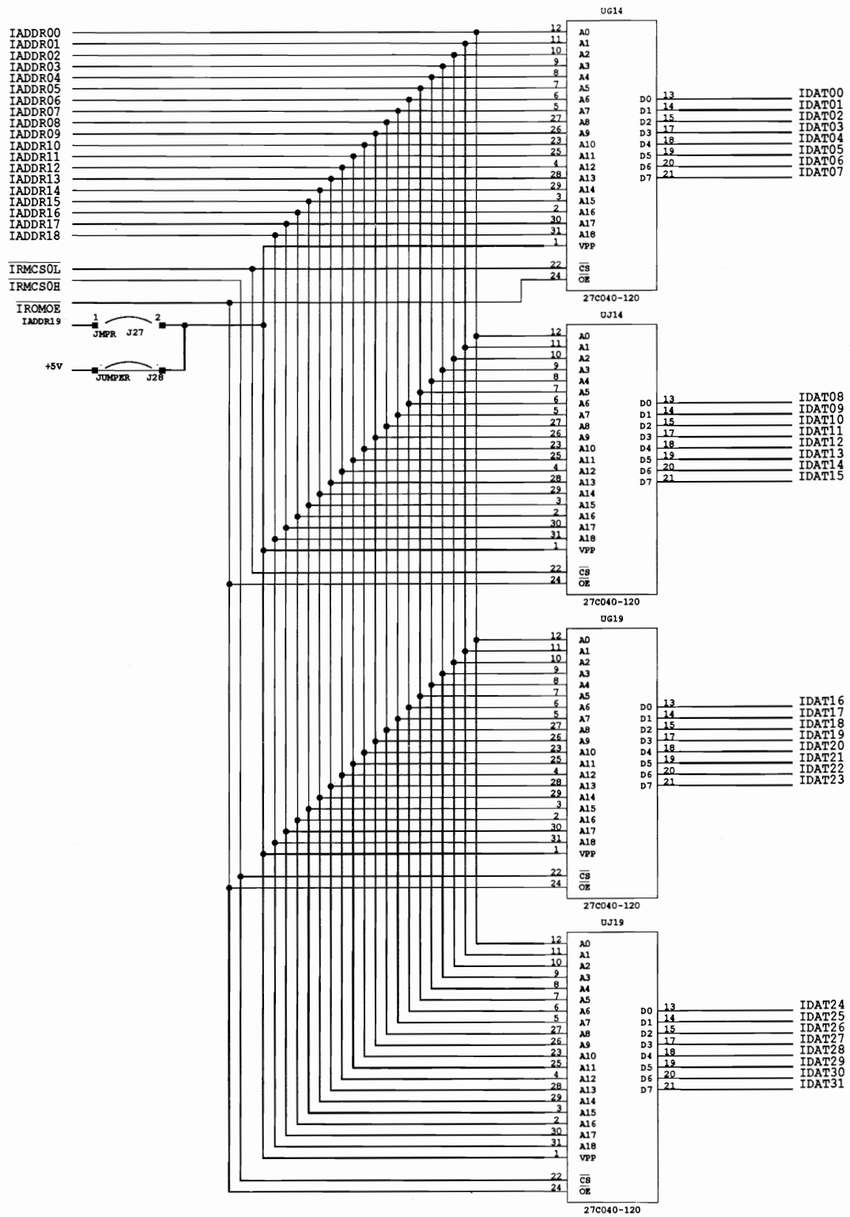

BANK 0

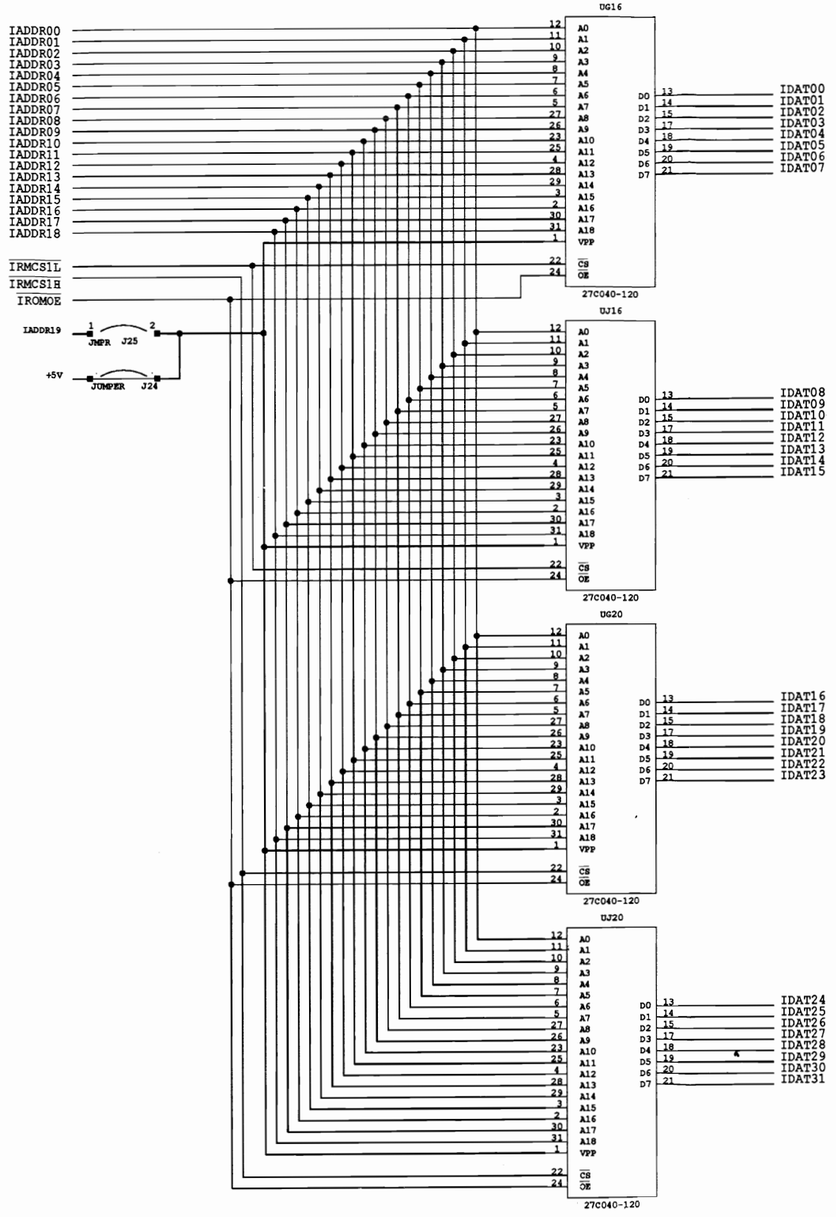

BANK 1

CPU BOARD
Sheet 11 of 22

INFORMATION CONTAINED HEREIN IS CONFIDENTIAL PROPERTY AND MAY NOT BE USED OR DISCLOSED WITHOUT EXPRESS WRITTEN CONSENT FROM THE COMPANY.

PROJECT ENG. REM	FIRST PROJ. NO 40023	DATE 09DEC92	WILLIAMS ELECTRONICS AND GAMES INC. MIDWAY MANUFACTURING COMPANY 3401 N. CALIFORNIA AVE. CHICAGO IL.
DWN. BY REM	DATE	FIRST USEAGE A-14816	DATE 09DEC92
CHECKED REM	DATE	CURRENT PROJECT 40023	DATE 19AUG93
APPROVED	DATE	SHEET 11	OF 22

TITLE: IMAGE ROM BANK 0/BANK 1

PART NO. 16-9470 REV. 5

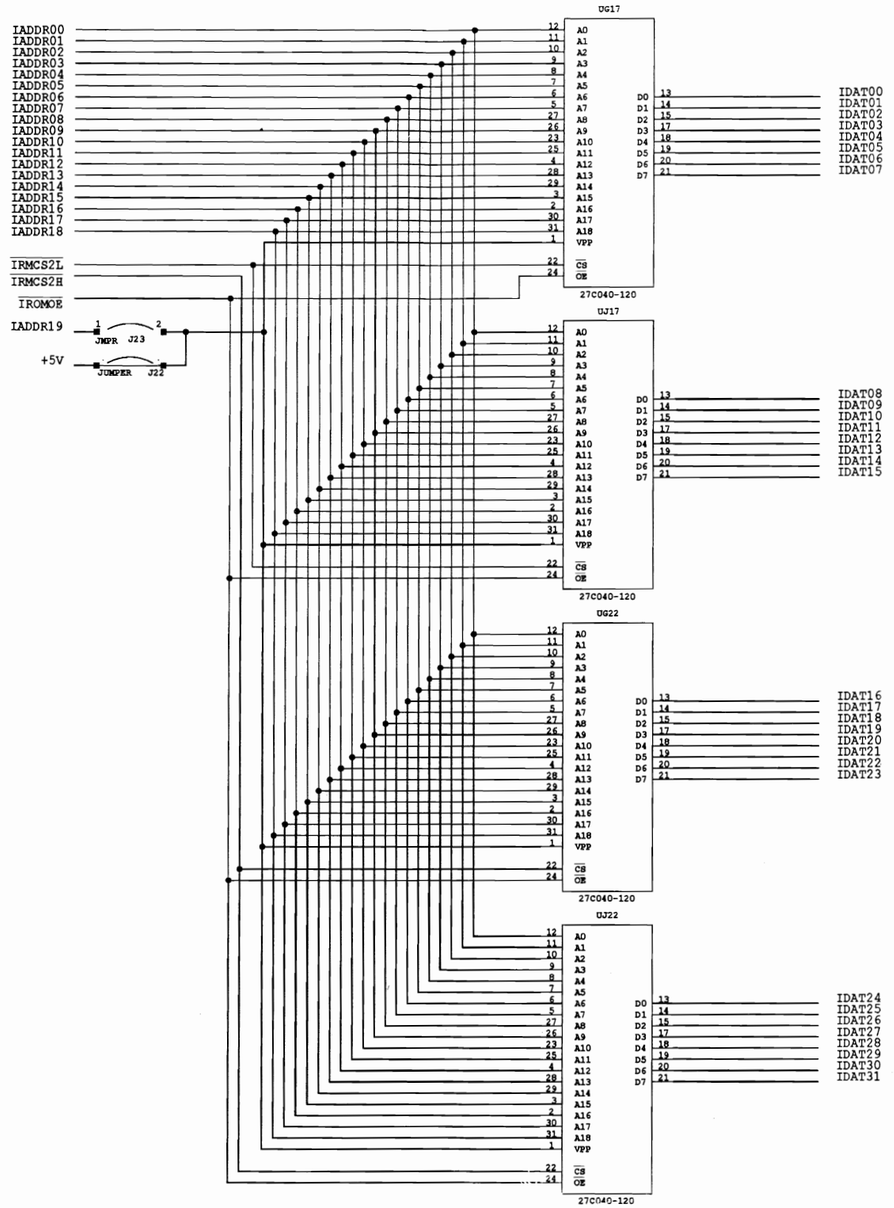

BANK 2

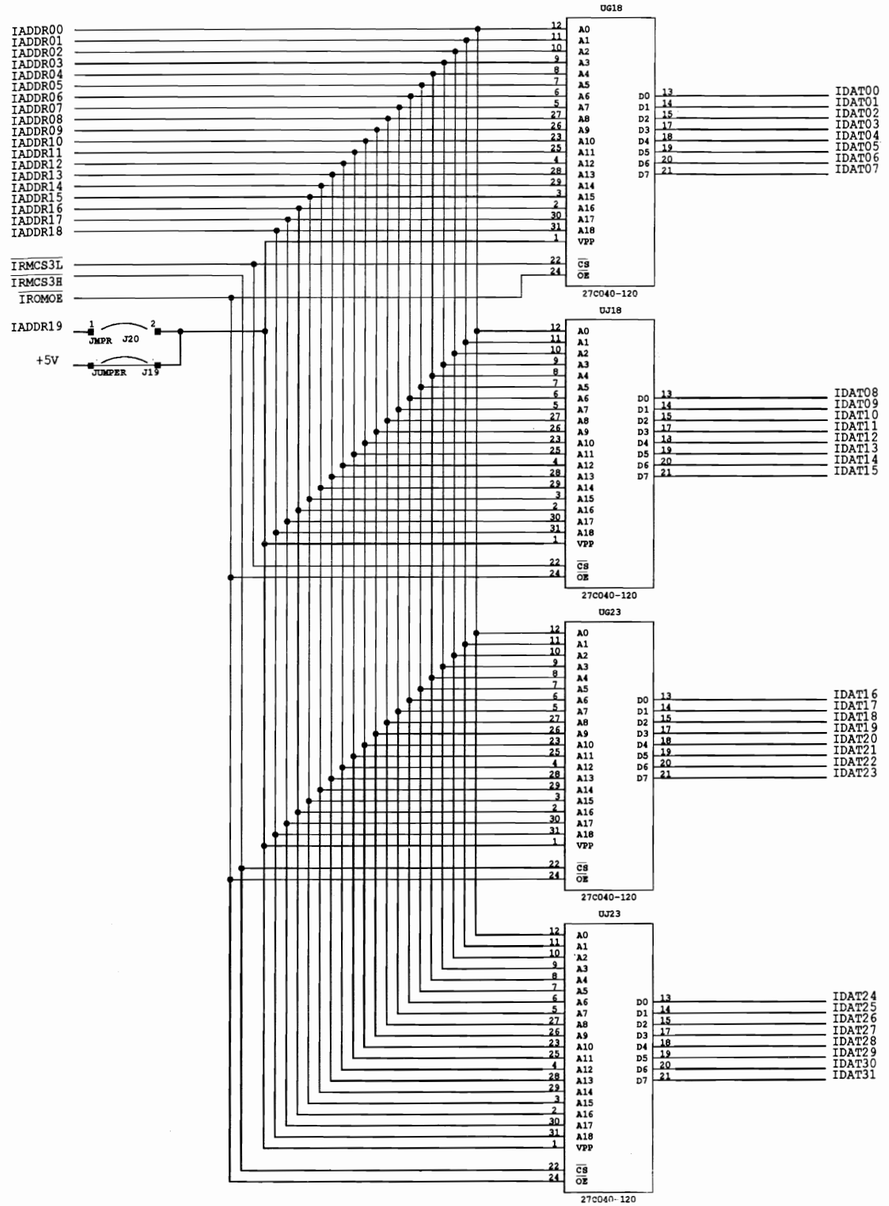

BANK 3

CPU BOARD
Sheet 12 of 22

INFORMATION CONTAINED HEREIN IS CONFIDENTIAL PROPERTY AND MAY NOT BE USED OR DISCLOSED WITHOUT EXPRESS WRITTEN CONSENT FROM THE COMPANY.

PROJECT ENG. REM	FIRST PROJ. NO 40023	DATE 09DEC92	WILLIAMS ELECTRONICS AND GAMES INC. MIDWAY MANUFACTURING COMPANY 3401 N. CALIFORNIA AVE. CHICAGO IL.
DWN. BY REM	FIRST USEAGE A-14816	DATE 09DEC92	TITLE IMAGE ROM BANK 2/BANK 3
CHECKED REM	CURRENT PROJECT 40023	DATE 19AUG93	
APPROVED	SHEET 12	OF 22	PART NO. 16-9470 REV. 5

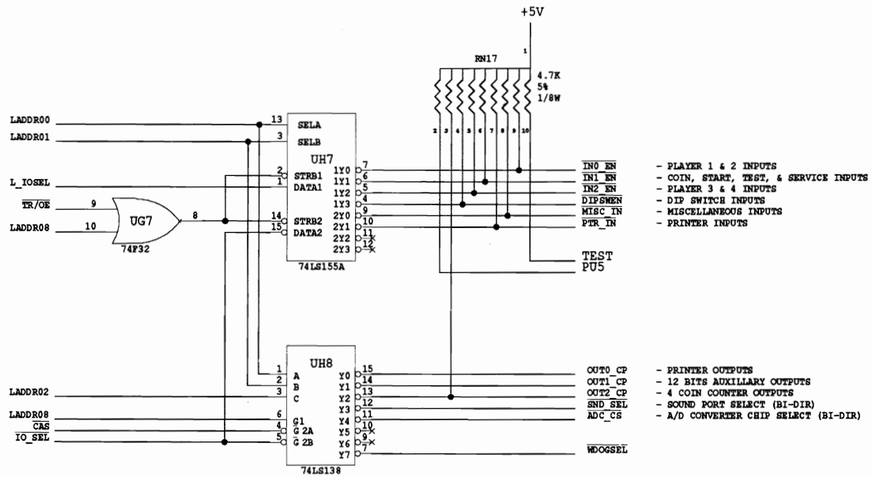

CPU BOARD
Sheet 13 of 22

19 AUG. 1993 REM - CHANGED UG7 74LS32 TO 74F32.

INFORMATION CONTAINED HEREIN IS CONFIDENTIAL PROPERTY AND MAY NOT BE USED OR DISCLOSED WITHOUT EXPRESS WRITTEN CONSENT FROM THE COMPANY.

PROJECT ENG. REM	FIRST PROJ. NO 40023	DATE 09DEC92	WILLIAMS ELECTRONICS AND GAMES INC. MIDWAY MANUFACTURING COMPANY 3401 N. CALIFORNIA AVE. CHICAGO IL.
DWN. BY REM	DATE	FIRST USERAGE A-14816	DATE 09DEC92
CHECKED REM	DATE	CURRENT PROJECT 40023	DATE 19AUG93
APPROVED	DATE	SHEET 13 OF 22	PART NO. 16-9470 REV. 5

TITLE: I/O DECODING

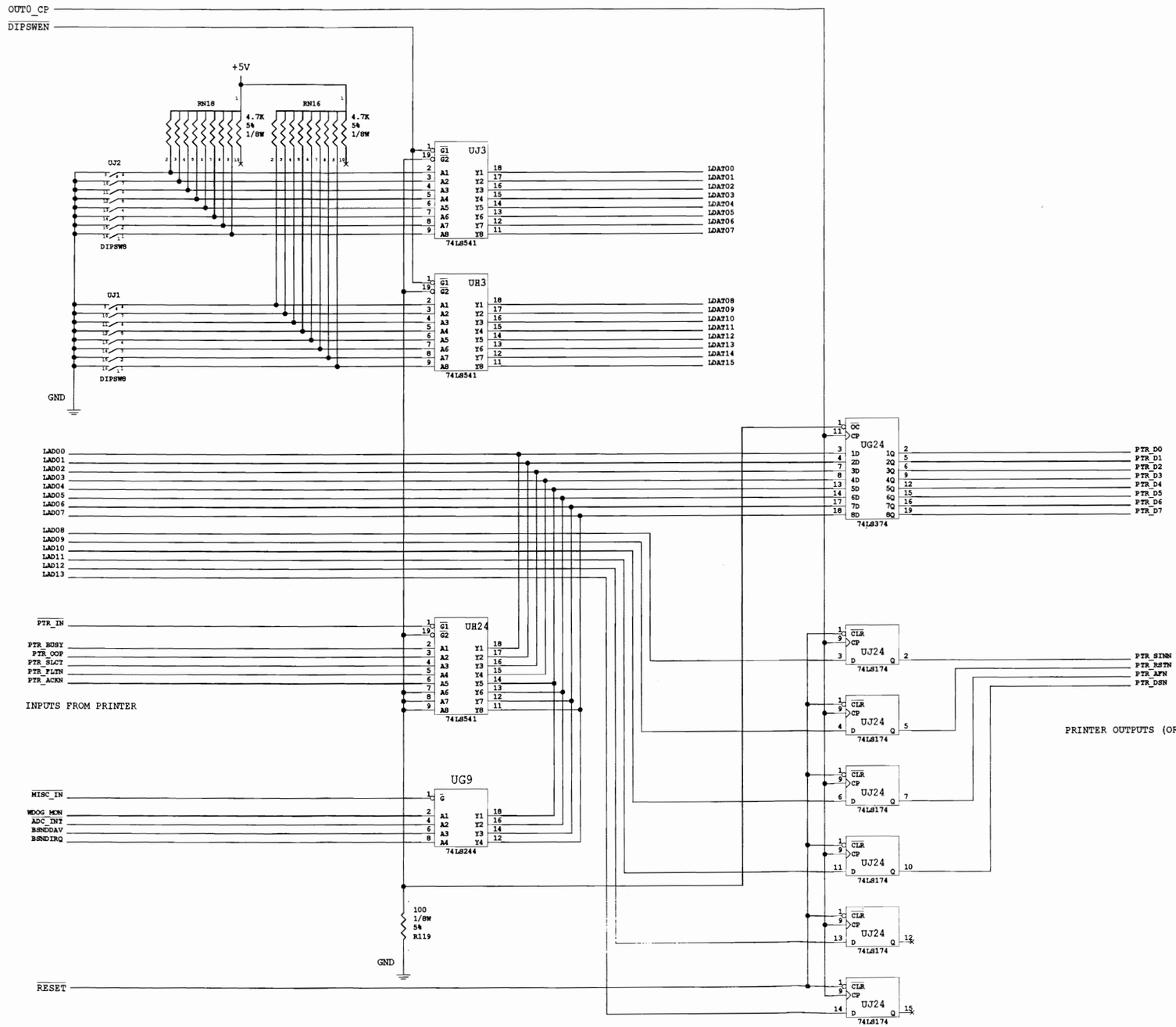

CPU BOARD
Sheet 14 of 22

INFORMATION CONTAINED HEREIN IS CONFIDENTIAL PROPERTY AND MAY NOT BE USED OR DISCLOSED WITHOUT EXPRESS WRITTEN CONSENT FROM THE COMPANY.

PROJECT ENG. REM	FIRST PROJ. NO 40023	DATE 09DEC92	WILLIAMS ELECTRONICS AND GAMES INC. MIDWAY MANUFACTURING COMPANY 3401 N. CALIFORNIA AVE. CHICAGO IL.
DWN. BY REM	DATE	FIRST USEAGE A-14816	DATE 09DEC92
CHECKED REM	DATE	CURRENT PROJECT 40023	DATE 19AUG93
APPROVED	DATE	SHEET 14 OF 22	TITLE: MISC. I/O AND DIP SWITCH
		PART NO. 16-9470	REV. 5

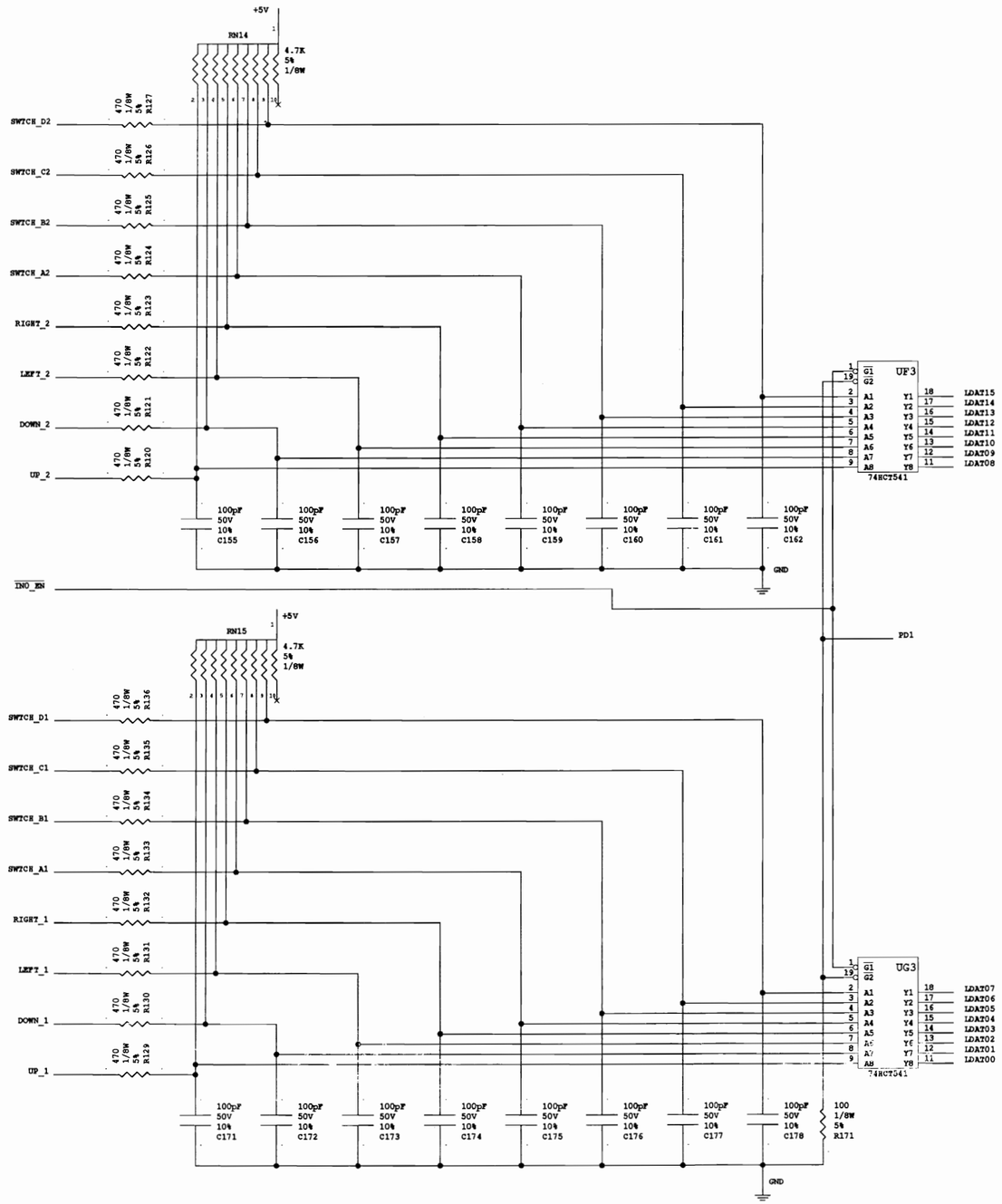

CPU BOARD
Sheet 15 of 22

INFORMATION CONTAINED HEREIN IS CONFIDENTIAL PROPERTY AND MAY NOT BE USED OR DISCLOSED WITHOUT EXPRESS WRITTEN CONSENT FROM THE COMPANY.

PROJECT ENG. REM		FIRST PROJ. NO 40023	DATE 09DEC92
DWN. BY REM	DATE	FIRST USEAGE A-14816	DATE 09DEC92
CHECKED REM	DATE	CURRENT PROJECT 40023	DATE 19AUG93
APPROVED	DATE	SHEET 15	OF 22

WILLIAMS ELECTRONICS AND GAMES INC.
MIDWAY MANUFACTURING COMPANY
3401 N. CALIFORNIA AVE. CHICAGO IL.

TITLE: PLAYER 1/PLAYER 2 INPUTS

PART NO. 16-9470 REV. 5

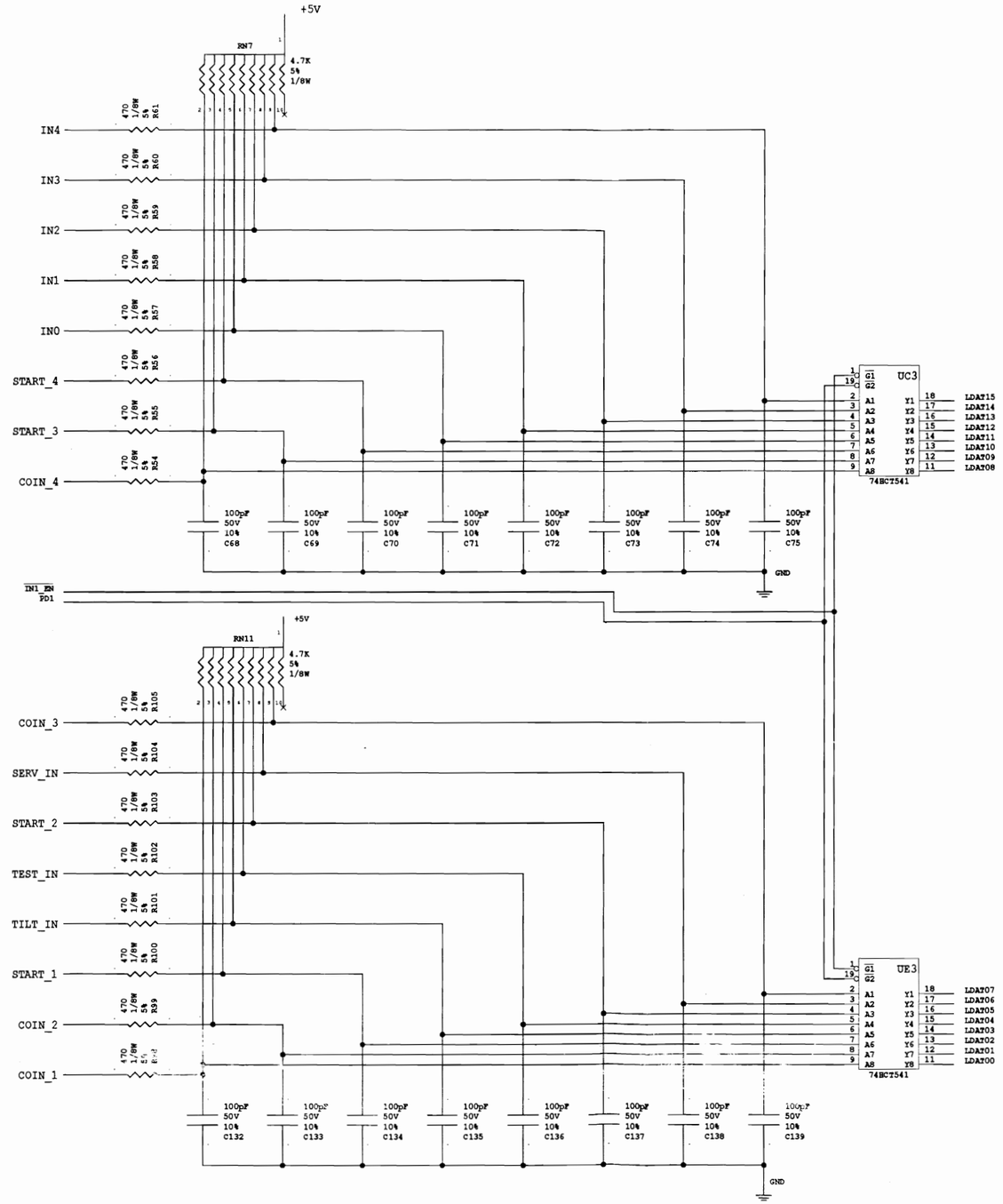

CPU BOARD
Sheet 16 of 22

INFORMATION CONTAINED HEREIN IS CONFIDENTIAL PROPERTY AND MAY NOT BE USED OR DISCLOSED WITHOUT EXPRESS WRITTEN CONSENT FROM THE COMPANY.

PROJECT ENG. REM		FIRST PROJ. NO 40023	DATE 09DEC92
DWN. BY REM	DATE	FIRST USEAGE A-14816	DATE 09DEC92
CHECKED REM	DATE	CURRENT PROJECT 40023	DATE 19AUG93
APPROVED	DATE	SHEET 16	OF 22

WILLIAMS ELECTRONICS AND GAMES INC.
MIDWAY MANUFACTURING COMPANY
3401 N. CALIFORNIA AVE. CHICAGO IL.

TITLE: EXTRA INPUTS/COIN/START

PART NO. 16-9470 REV. 5

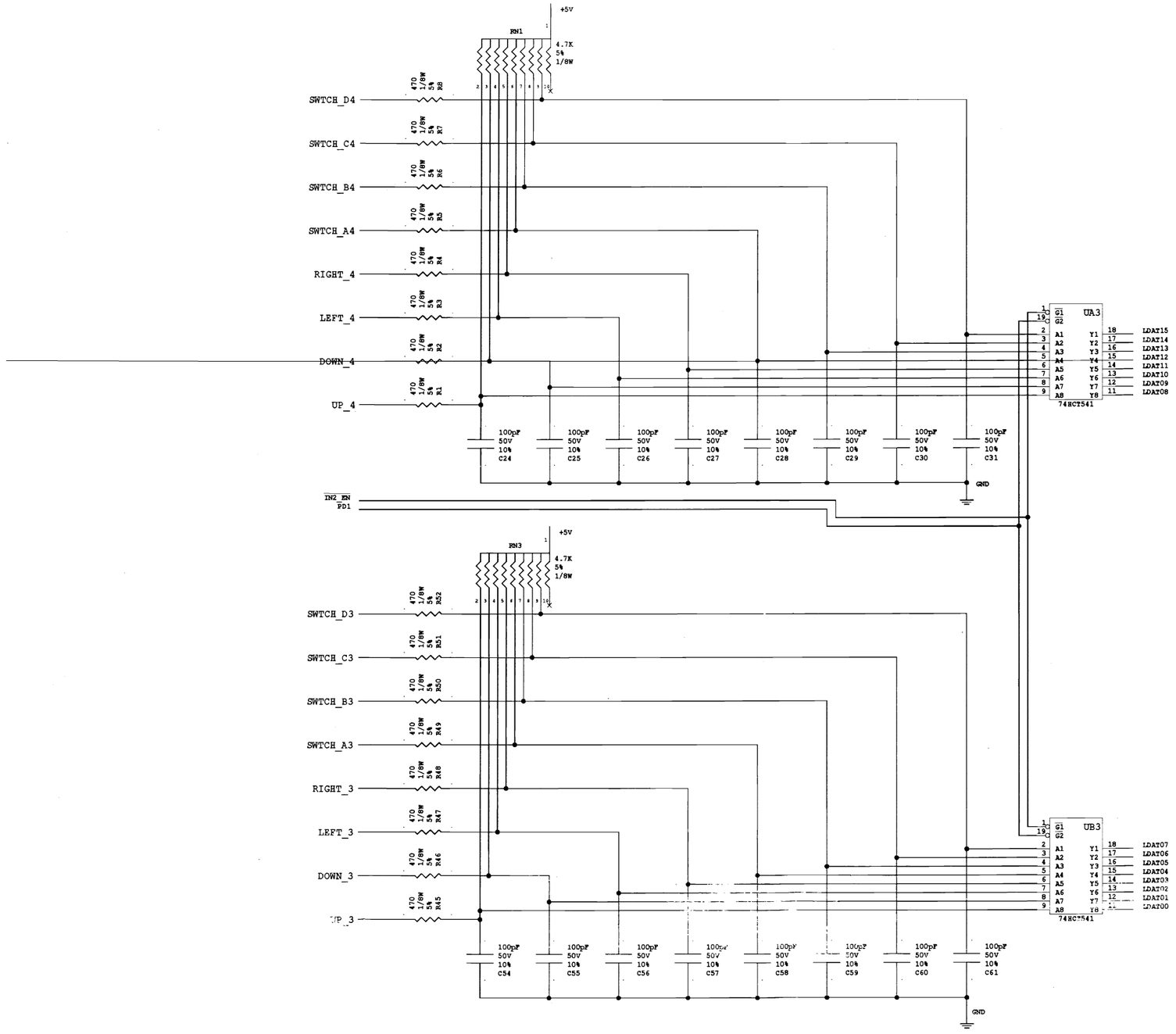

CPU BOARD
Sheet 17 of 22

INFORMATION CONTAINED HEREIN IS CONFIDENTIAL PROPERTY AND MAY NOT BE USED OR DISCLOSED WITHOUT EXPRESS WRITTEN CONSENT FROM THE COMPANY.

PROJECT ENG. REM		FIRST PROJ. NO 40023	DATE 09DEC92	WILLIAMS ELECTRONICS AND GAMES INC. MIDWAY MANUFACTURING COMPANY 3401 N. CALIFORNIA AVE. CHICAGO IL.
DWN. BY REM	DATE	FIRST USEAGE A-14816	DATE 09DEC92	TITLE PLAYER 3/PLAYER 4 INPUTS
CHECKED REM	DATE	CURRENT PROJECT 40023	DATE 19AUG93	
APPROVED	DATE	SHEET 17	OF 22	PART NO. 16-9470 REV. 5

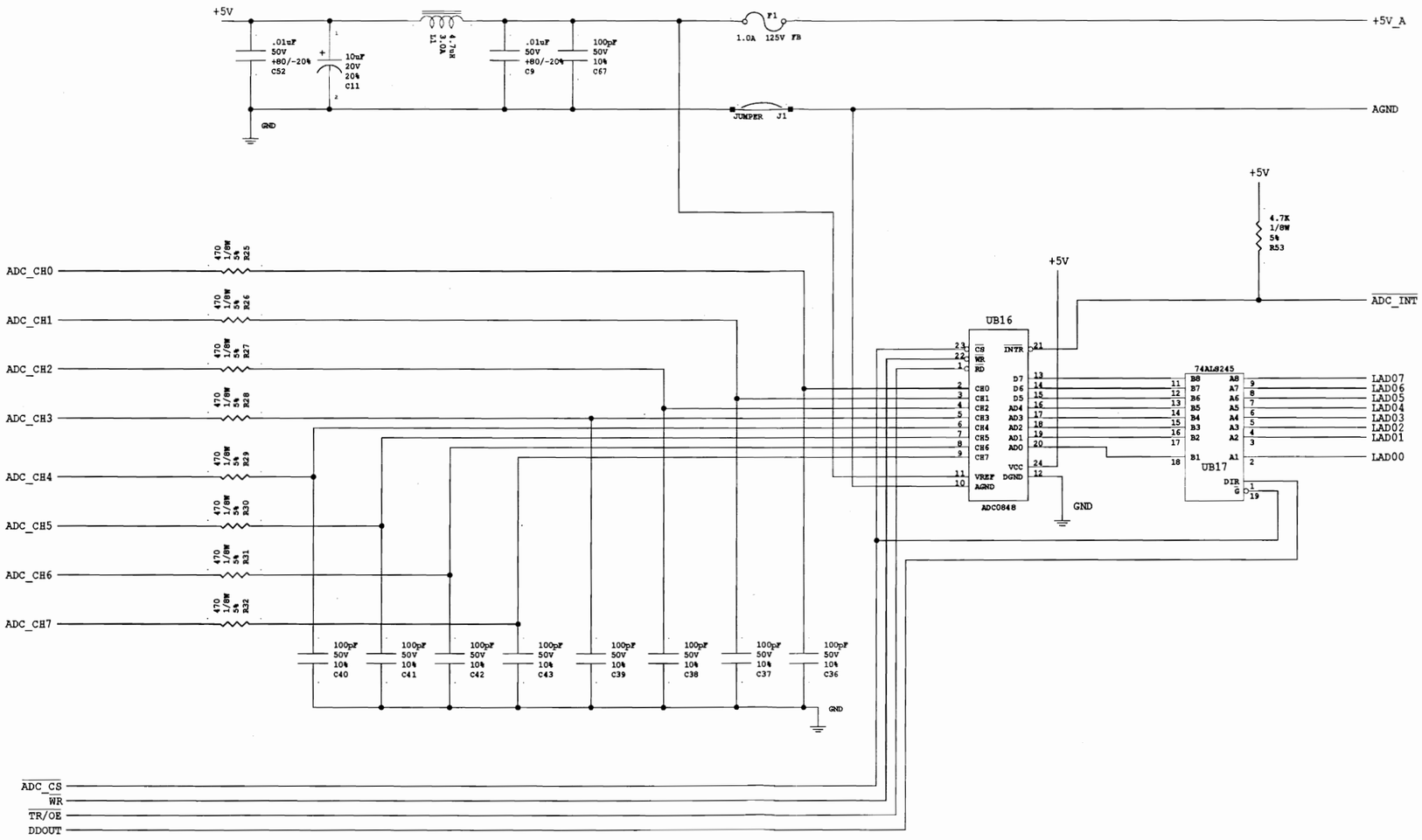

CPU BOARD
Sheet 18 of 22

INFORMATION CONTAINED HEREIN IS CONFIDENTIAL PROPERTY AND MAY NOT BE USED OR DISCLOSED WITHOUT EXPRESS WRITTEN CONSENT FROM THE COMPANY.

PROJECT ENG. REM	FIRST PROJ. NO 40023	DATE 09DEC92	WILLIAMS ELECTRONICS AND GAMES INC. MIDWAY MANUFACTURING COMPANY 3401 N. CALIFORNIA AVE. CHICAGO IL.
DWN. BY REM	DATE	FIRST USEAGE A-14816	DATE 09DEC92
CHECKED REM	DATE	CURRENT PROJECT 40023	DATE 19AUG93
APPROVED	DATE	SHEET 18 OF 22	TITLE A/D
			PART NO. 16-9470 REV. 5

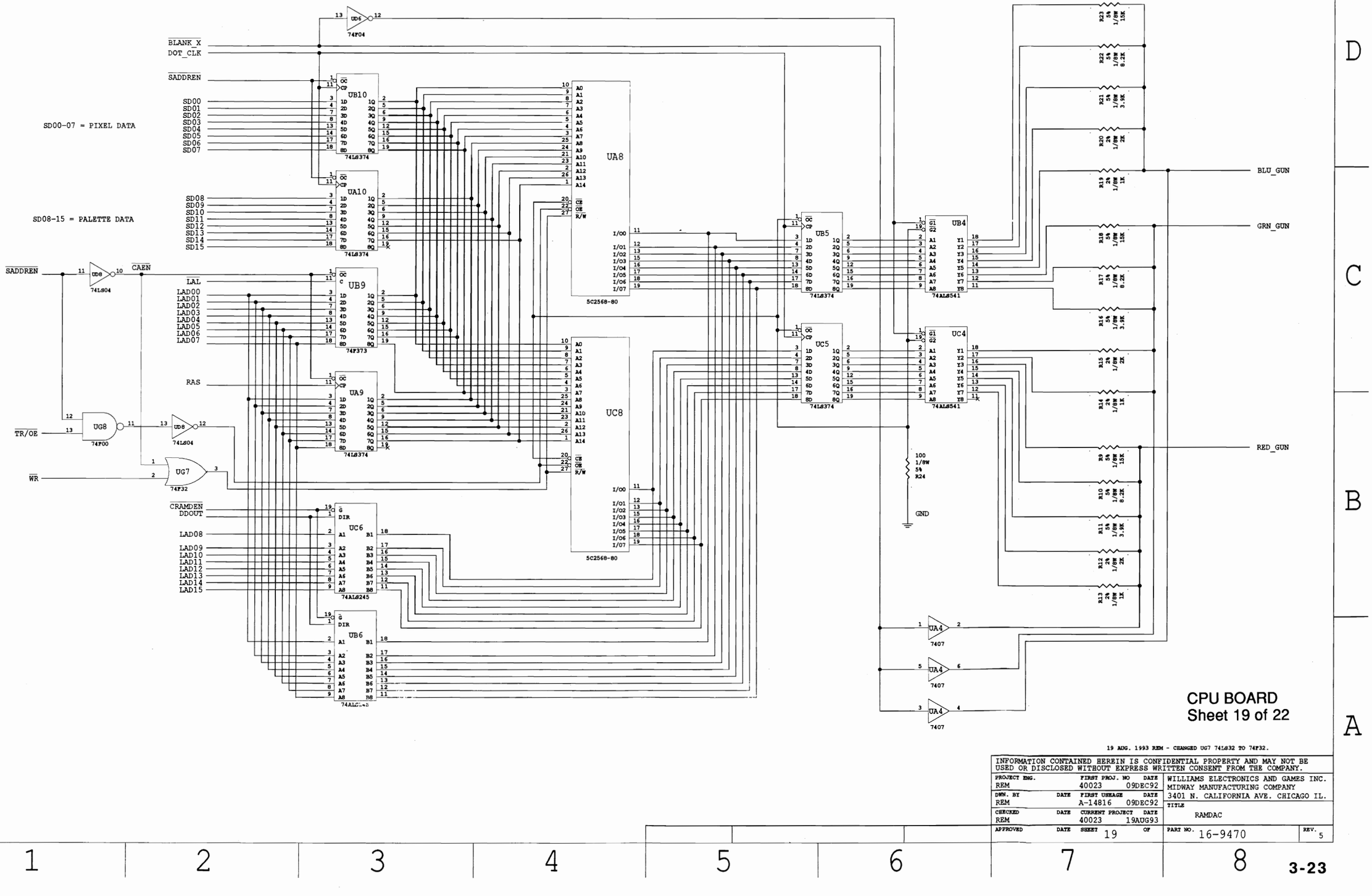

CPU BOARD
Sheet 19 of 22

19 AUG. 1993 REM - CHANGED UG7 74LS32 TO 74F32.

INFORMATION CONTAINED HEREIN IS CONFIDENTIAL PROPERTY AND MAY NOT BE USED OR DISCLOSED WITHOUT EXPRESS WRITTEN CONSENT FROM THE COMPANY.

PROJECT ENG. REM	FIRST PROJ. NO 40023	DATE 09DEC92	WILLIAMS ELECTRONICS AND GAMES INC. MIDWAY MANUFACTURING COMPANY 3401 N. CALIFORNIA AVE. CHICAGO IL.
DWN. BY REM	DATE	FIRST USEAGE A-14816	DATE 09DEC92
CHECKED REM	DATE	CURRENT PROJECT 40023	DATE 19AUG93
APPROVED	DATE	SHEET 19	OF

TITLE: RAMDAC

PART NO. 16-9470 REV. 5

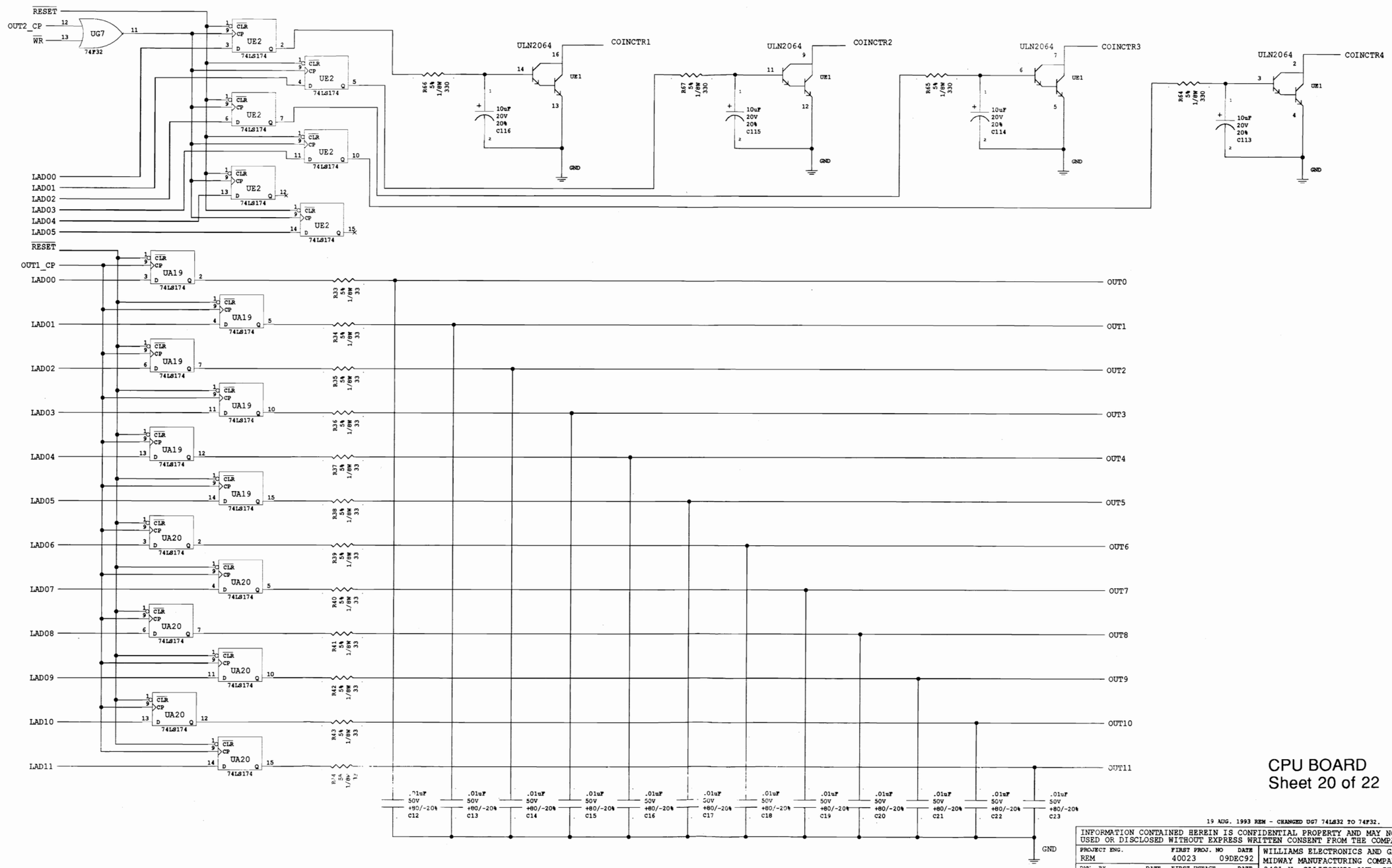

CPU BOARD
Sheet 20 of 22

19 AUG. 1993 REM - CHANGED UG7 74LS32 TO 74F32.

INFORMATION CONTAINED HEREIN IS CONFIDENTIAL PROPERTY AND MAY NOT BE USED OR DISCLOSED WITHOUT EXPRESS WRITTEN CONSENT FROM THE COMPANY.

PROJECT ENG. REM		FIRST PROJ. NO 40023	DATE 09DEC92
DWN. BY REM	DATE	FIRST USEAGE A-14816	DATE 09DEC92
CHECKED REM	DATE	CURRENT PROJECT 40023	DATE 19AUG93
APPROVED	DATE	SHEET 20	OF 22

WILLIAMS ELECTRONICS AND GAMES INC.
MIDWAY MANUFACTURING COMPANY
3401 N. CALIFORNIA AVE. CHICAGO IL.

TITLE
OUTPUTS

PART NO. 16-9470 REV. 5

SPARE GATES

PU1

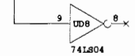

PU2

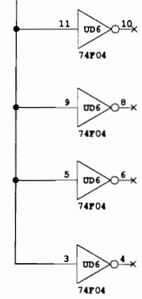

PU3

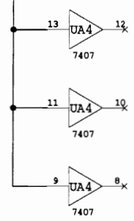

PU4

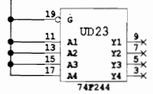

PU5

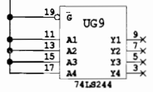

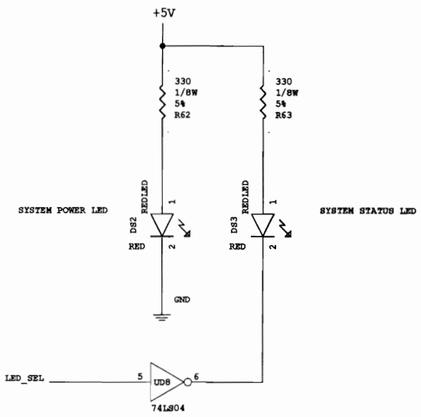

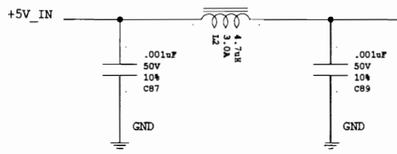

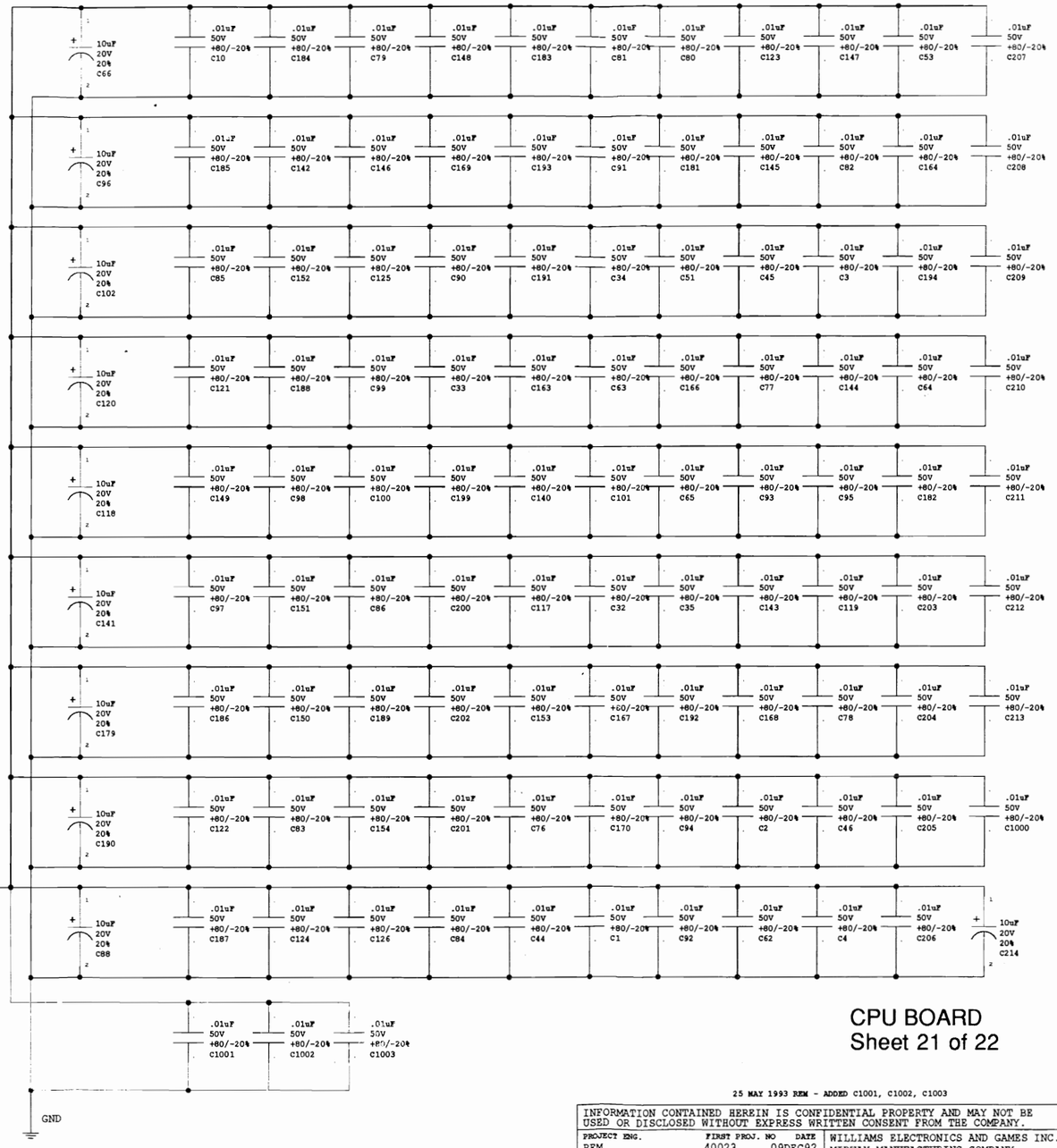

CPU BOARD
Sheet 21 of 22

25 MAY 1993 REM - ADDED C1001, C1002, C1003

INFORMATION CONTAINED HEREIN IS CONFIDENTIAL PROPERTY AND MAY NOT BE USED OR DISCLOSED WITHOUT EXPRESS WRITTEN CONSENT FROM THE COMPANY.

PROJECT ENG. REM	FIRST PROJ. NO 40023	DATE 09DEC92	WILLIAMS ELECTRONICS AND GAMES INC. MIDWAY MANUFACTURING COMPANY 3401 N. CALIFORNIA AVE. CHICAGO IL.
DWN. BY REM	DATE	FIRST USEAGE A-14816	DATE 09DEC92
CHECKED REM	DATE	CURRENT PROJECT 40023	DATE 19AUG93
APPROVED	DATE	SHEET 21	OF 22

TITLE: POWER

PART NO. 16-9470 REV. 5

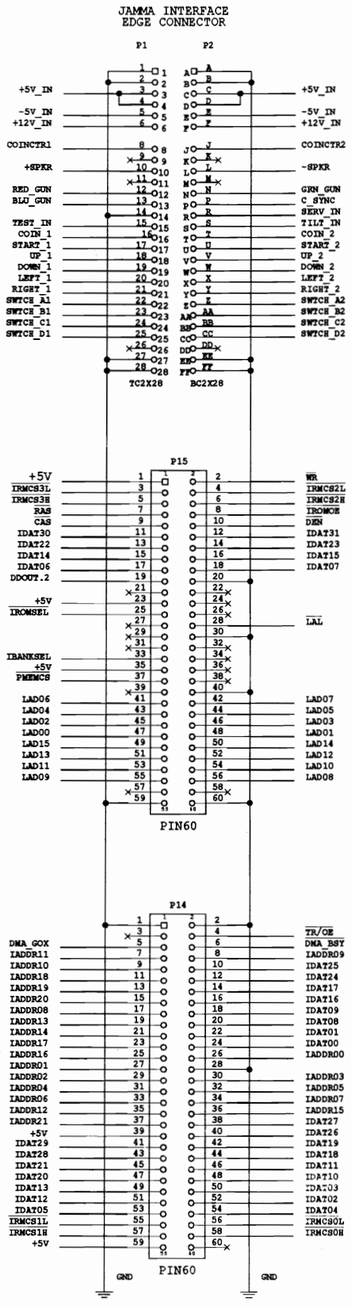

25 MAY 1993 REM - ADDED PWR, GND, IROMSEL~, & IBANKSEL TO P14 & P15.

INFORMATION CONTAINED HEREIN IS CONFIDENTIAL PROPERTY AND MAY NOT BE USED OR DISCLOSED WITHOUT EXPRESS WRITTEN CONSENT FROM THE COMPANY.

PROJECT ENG. REM		FIRST PROJ. NO 40023	DATE 09DEC92
DWN. BY REM	DATE	FIRST USEAGE A-14816	DATE 09DEC92
CHECKED REM	DATE	CURRENT PROJECT 40023	DATE 19AUG93
APPROVED	DATE	SHEET 22	OF 22

WILLIAMS ELECTRONICS AND GAMES INC.
MIDWAY MANUFACTURING COMPANY
3401 N. CALIFORNIA AVE. CHICAGO IL.

TITLE: CONNECTORS

PART NO. 16-9470 REV. 5

CPU BOARD
Sheet 22 of 22

IROM ADDRESS BUFFERS

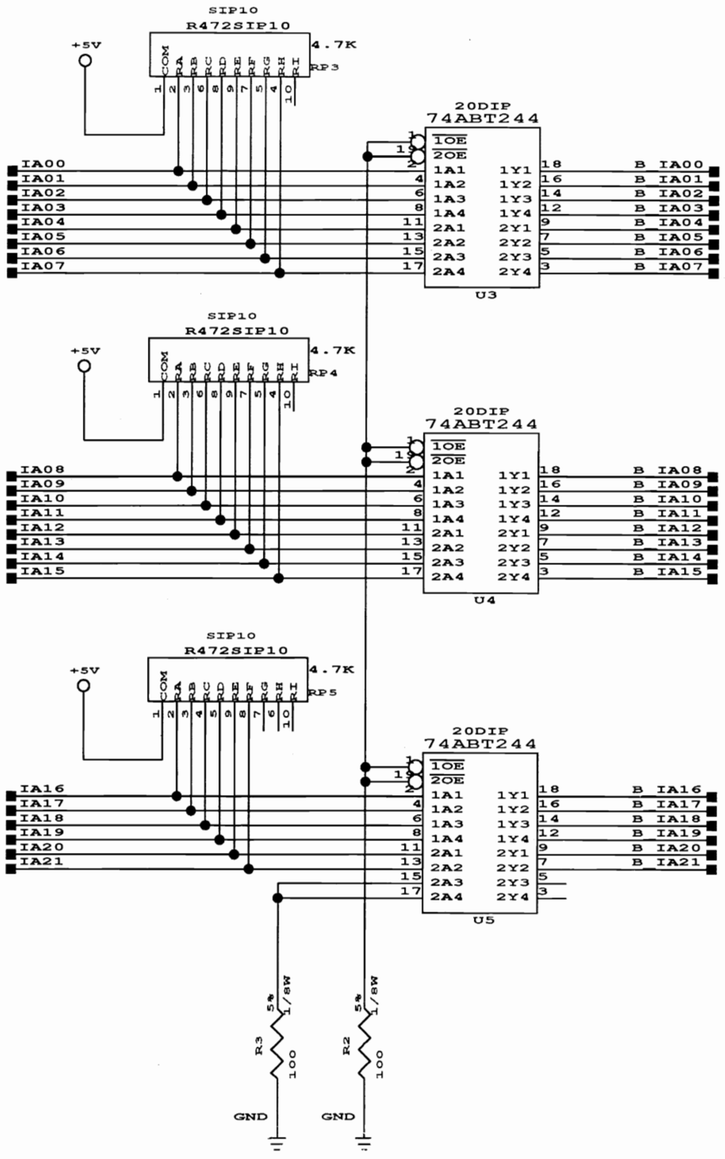

IROM CS GENERATOR

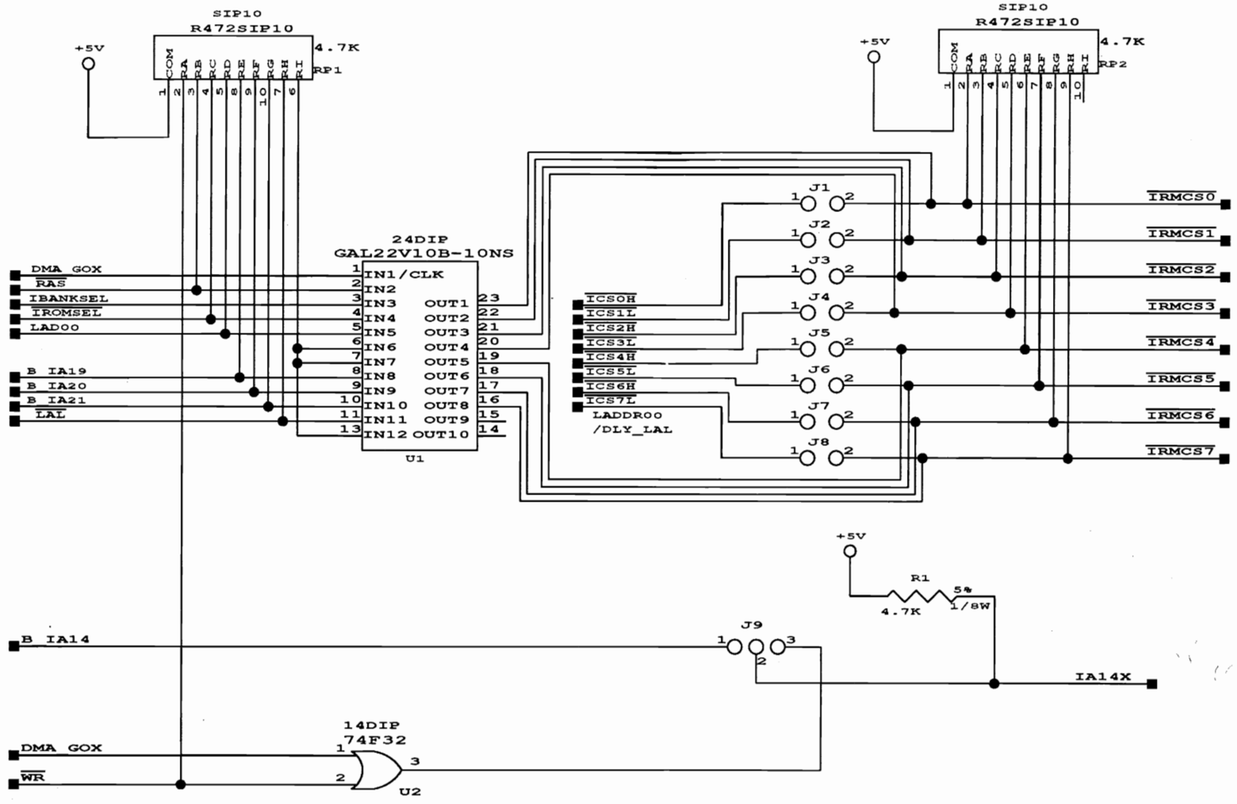

MEMORY EXPANSION BOARD
Sheet 1 of 5

ECN	CHANGE	DATE

INFORMATION CONTAINED HEREIN IS CONFIDENTIAL PROPERTY AND MAY NOT BE USED OR DISCLOSED WITHOUT EXPRESS WRITTEN CONSENT FROM THE COMPANY.

PROJECT ENG.	1ST PROJ. NO. DATE	WILLIAMS ELECTRONICS GAMES MIDWAY MANUFACTURING CO. 3401 N. CALIFORNIA AVENUE CHICAGO ILLINOIS USA
DWN. BY DATE REM 8-20-1993_6:34	1ST USEAGE DATE	TITLE 13664-01 PLD/CONTROL & IA BUFFERS
CHECKED DATE	CURRENT PROJ. DATE	
APPROVED DATE	SHEET OF 1 5	PART NO. / REV. 1

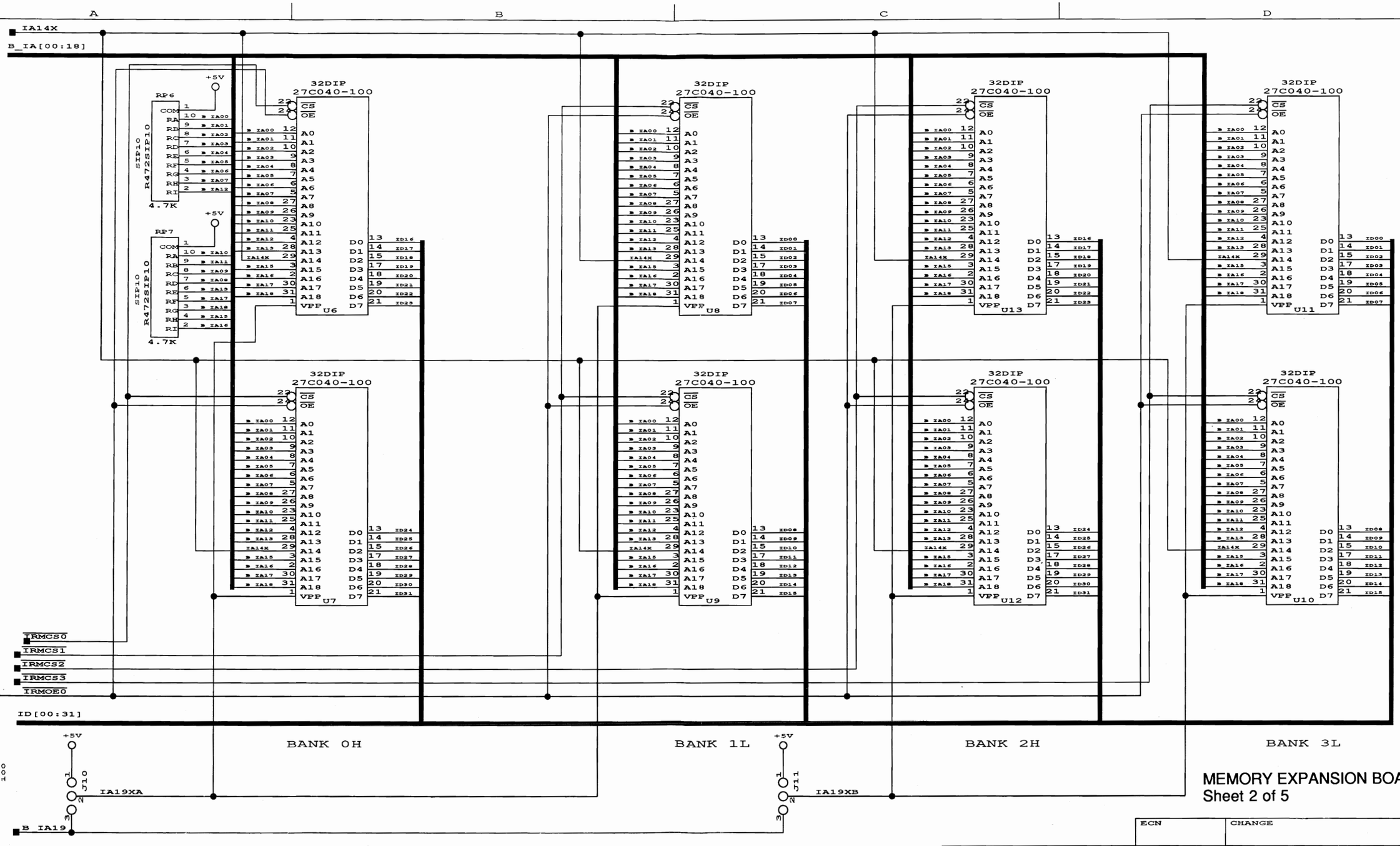

Jumper J10 & J11 pins 1-2 for 4 Mbit EPROM.
Jumper J10 & J11 pins 2-3 for 8 Mbit EPROM.
Green wire J10 & J11 pins 2 to B_IA14 for 4 Mbit RAM.

MEMORY EXPANSION BOARD
Sheet 2 of 5

ECN	CHANGE	DATE

INFORMATION CONTAINED HEREIN IS CONFIDENTIAL PROPERTY AND MAY NOT BE USED OR DISCLOSED WITHOUT EXPRESS WRITTEN CONSENT FROM THE COMPANY.

PROJECT ENG.	1ST PROJ. NO. DATE	WILLIAMS ELECTRONICS GAMES MIDWAY MANUFACTURING CO. 3401 N. CALIFORNIA AVENUE CHICAGO ILLINOIS USA
DWN. BY DATE REM 7-26-1993_15:15	1ST USEAGE DATE	TITLE 13664-01 IMAGE ROM BANK 0/BANK 1
CHECKED DATE	CURRENT PROJ. DATE	
APPROVED DATE	SHEET 2 OF 5	PART NO. REV. 1

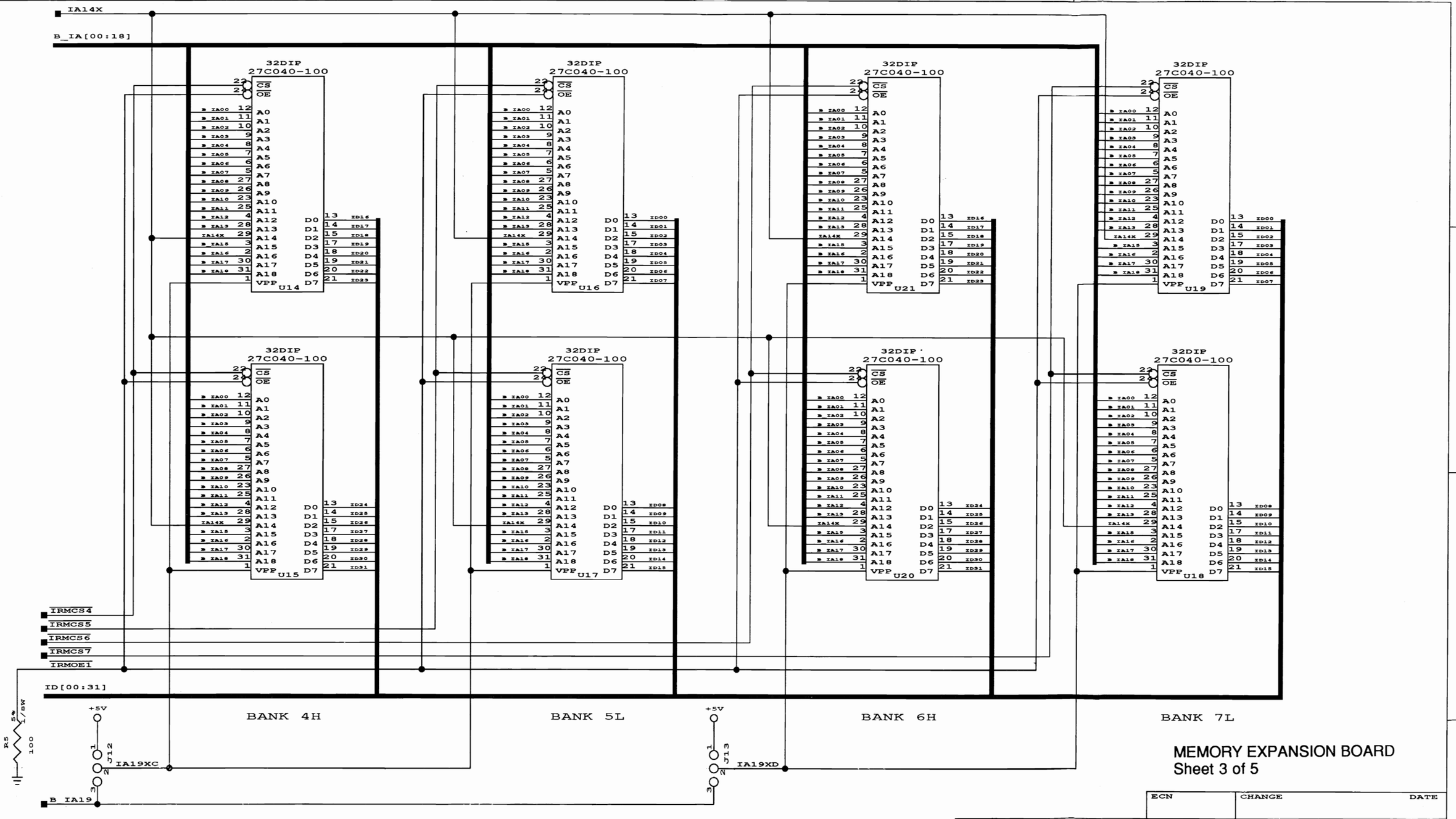

Jumper J12 & J13 pins 1-2 for 4 Mbit EPROM.
Jumper J12 & J13 pins 2-3 for 8 Mbit EPROM.
Green wire J12 & J13 pins 2 to B_IA14 for 4 Mbit RAM.

MEMORY EXPANSION BOARD
Sheet 3 of 5

ECN	CHANGE	DATE

INFORMATION CONTAINED HEREIN IS CONFIDENTIAL PROPERTY AND MAY NOT BE USED OR DISCLOSED WITHOUT EXPRESS WRITTEN CONSENT FROM THE COMPANY.

PROJECT ENG.	1ST PROJ. NO. DATE	WILLIAMS ELECTRONICS GAMES MIDWAY MANUFACTURING CO. 3401 N. CALIFORNIA AVENUE CHICAGO ILLINOIS USA
DWN. BY DATE REM 7-26-1993_15:15	1ST USEAGE DATE	TITLE 13664-01 IMAGE ROM BANK 0/BANK 1
CHECKED DATE	CURRENT PROJ. DATE	
APPROVED DATE	SHEET 3 OF 5	PART NO. / REV. 1

SPARE GATES

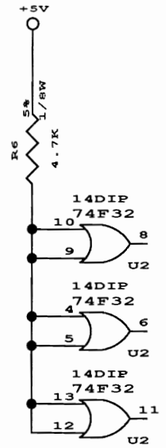

BYPASS CAPS

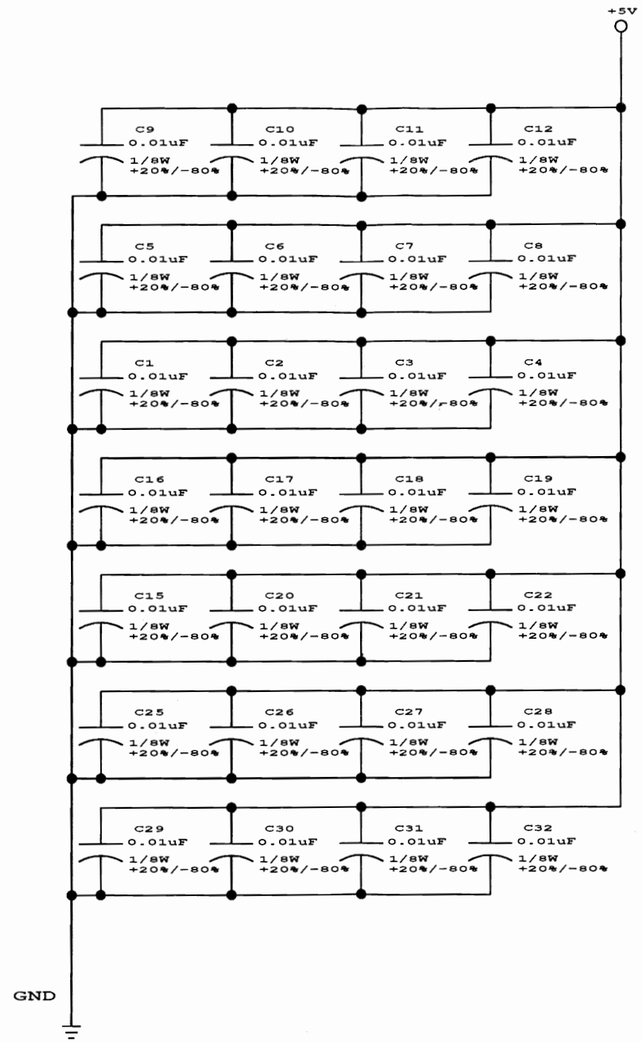

FILTER CAPS

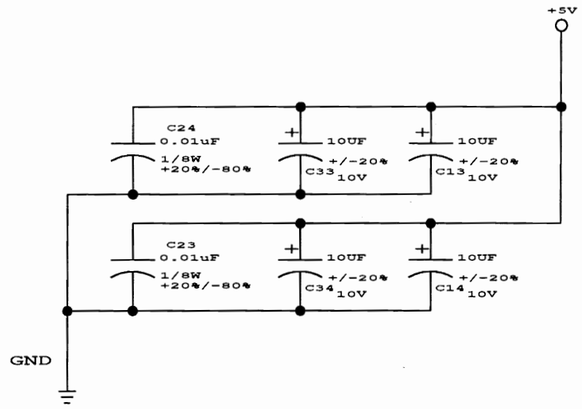

MEMORY EXPANSION BOARD
Sheet 4 of 5

ECN	CHANGE	DATE

INFORMATION CONTAINED HEREIN IS CONFIDENTIAL PROPERTY AND MAY NOT BE USED OR DISCLOSED WITHOUT EXPRESS WRITTEN CONSENT FROM THE COMPANY.

PROJECT ENG.	1ST PROJ. NO. DATE	WILLIAMS ELECTRONICS GAMES MIDWAY MANUFACTURING CO. 3401 N. CALIFORNIA AVENUE CHICAGO ILLINOIS USA
DWN. BY DATE REM 7-26-1993_15:15	1ST USEAGE DATE	TITLE 13664-01 CAPS/SPARE GATES
CHECKED DATE	CURRENT PROJ. DATE	
APPROVED DATE	SHEET OF 4 5	PART NO. / REV. 1

T-UNIT EXPANSION CONNECTORS

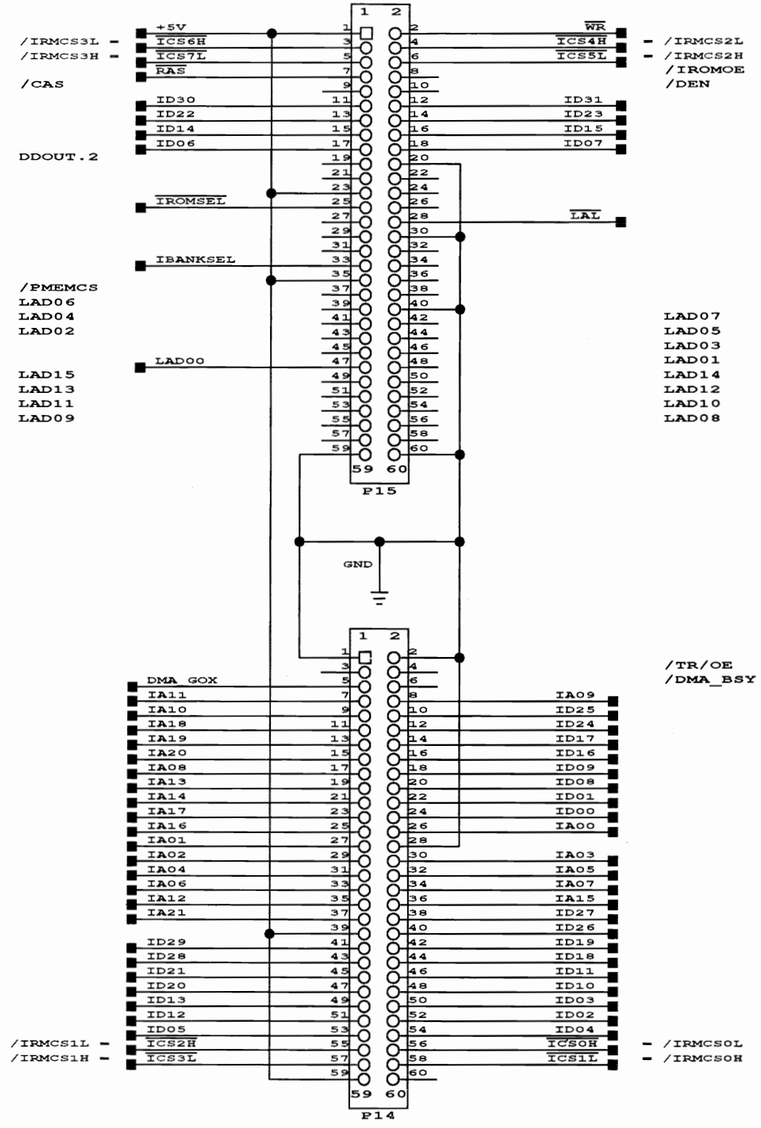

TUNIT CPU BOARD	EXPANSION CARD
/IRMCS0L	/ICS0H = /IRMSC0
/IRMCS0H	/ICS1L = /IRMSC1
/IRMCS1L	/ICS2H = /IRMSC2
/IRMCS1H	/ICS3L = /IRMSC3
/IRMCS2L	/ICS4H = /IRMSC4
/IRMCS2H	/ICS5L = /IRMSC5
/IRMCS3L	/ICS6H = /IRMSC6
/IRMCS3H	/ICS7L = /IRMSC7

MEMORY EXPANSION BOARD
Sheet 5 of 5

ECN	CHANGE	DATE

INFORMATION CONTAINED HEREIN IS CONFIDENTIAL PROPERTY AND MAY NOT BE USED OR DISCLOSED WITHOUT EXPRESS WRITTEN CONSENT FROM THE COMPANY.

PROJECT ENG.	1ST PROJ. NO. DATE	WILLIAMS ELECTRONICS GAMES MIDWAY MANUFACTURING CO. 3401 N. CALIFORNIA AVENUE CHICAGO ILLINOIS USA
DWN. BY DATE REM 7-26-1993_15:15	1ST USEAGE DATE	TITLE 13664-01 EXP. CONNECTORS
CHECKED DATE	CURRENT PROJ. DATE	
APPROVED DATE	SHEET OF 5 5	PART NO. / REV. 1

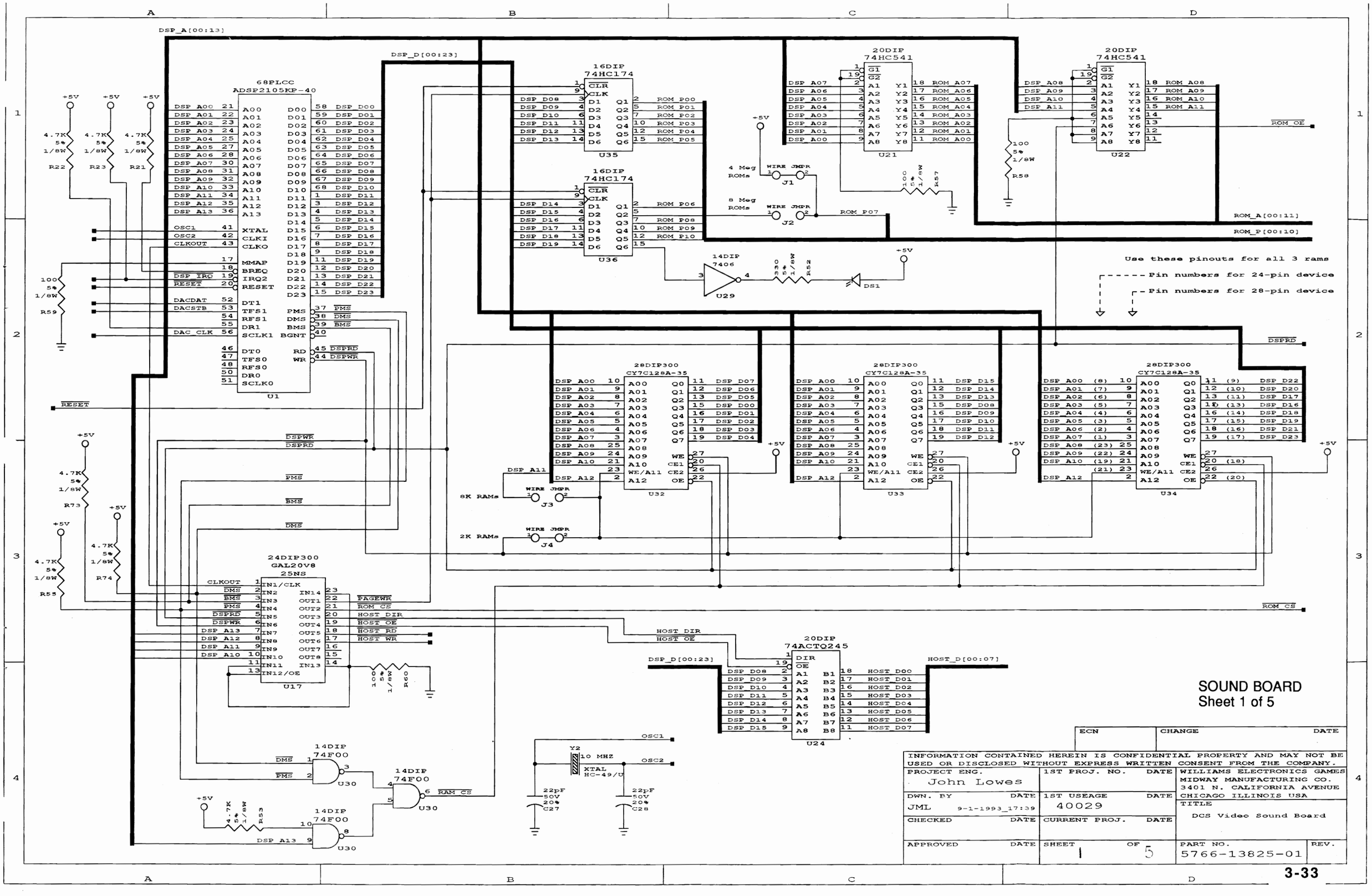
DSP_A[00:13]
DSP_D[00:23]
68PLCC
ADSP2105KP-40
U1
16DIP
74HC174
U35
U36
20DIP
74HC541
U21
U22
ROM_A[00:11]
ROM_P[00:10]
ROM OE
4 Meg ROMs
8 Meg ROMs
WIRE JMPR
J1
J2
ROM_P07
14DIP
7406
U29
DS1
Use these pinouts for all 3 rams
Pin numbers for 24-pin device
Pin numbers for 28-pin device
DSPRD
28DIP300
CY7C128A-35
U32
U33
U34
8K RAMs
2K RAMs
J3
J4
RESET
DSPWR
PMS
BMS
DMS
ROM CS
24DIP300
GAL20V8
25NS
U17
PAGEWR
HOST DIR
HOST RD
HOST WR
HOST OE
20DIP
74ACTQ245
U24
HOST_D[00:07]
14DIP
74F00
U30
RAM CS
Y2
10 MHZ
XTAL
HC-49/U
22pF
C27
C28
SOUND BOARD
Sheet 1 of 5
ECN
CHANGE
DATE
INFORMATION CONTAINED HEREIN IS CONFIDENTIAL PROPERTY AND MAY NOT BE USED OR DISCLOSED WITHOUT EXPRESS WRITTEN CONSENT FROM THE COMPANY.
PROJECT ENG.
John Lowes
1ST PROJ. NO.
DATE
WILLIAMS ELECTRONICS GAMES
MIDWAY MANUFACTURING CO.
3401 N. CALIFORNIA AVENUE
CHICAGO ILLINOIS USA
DWN. BY
JML 9-1-1993_17:39
1ST USEAGE
40029
TITLE
DCS Video Sound Board
CHECKED
CURRENT PROJ.
APPROVED
SHEET 1 OF 5
PART NO.
5766-13825-01
REV.
3-33

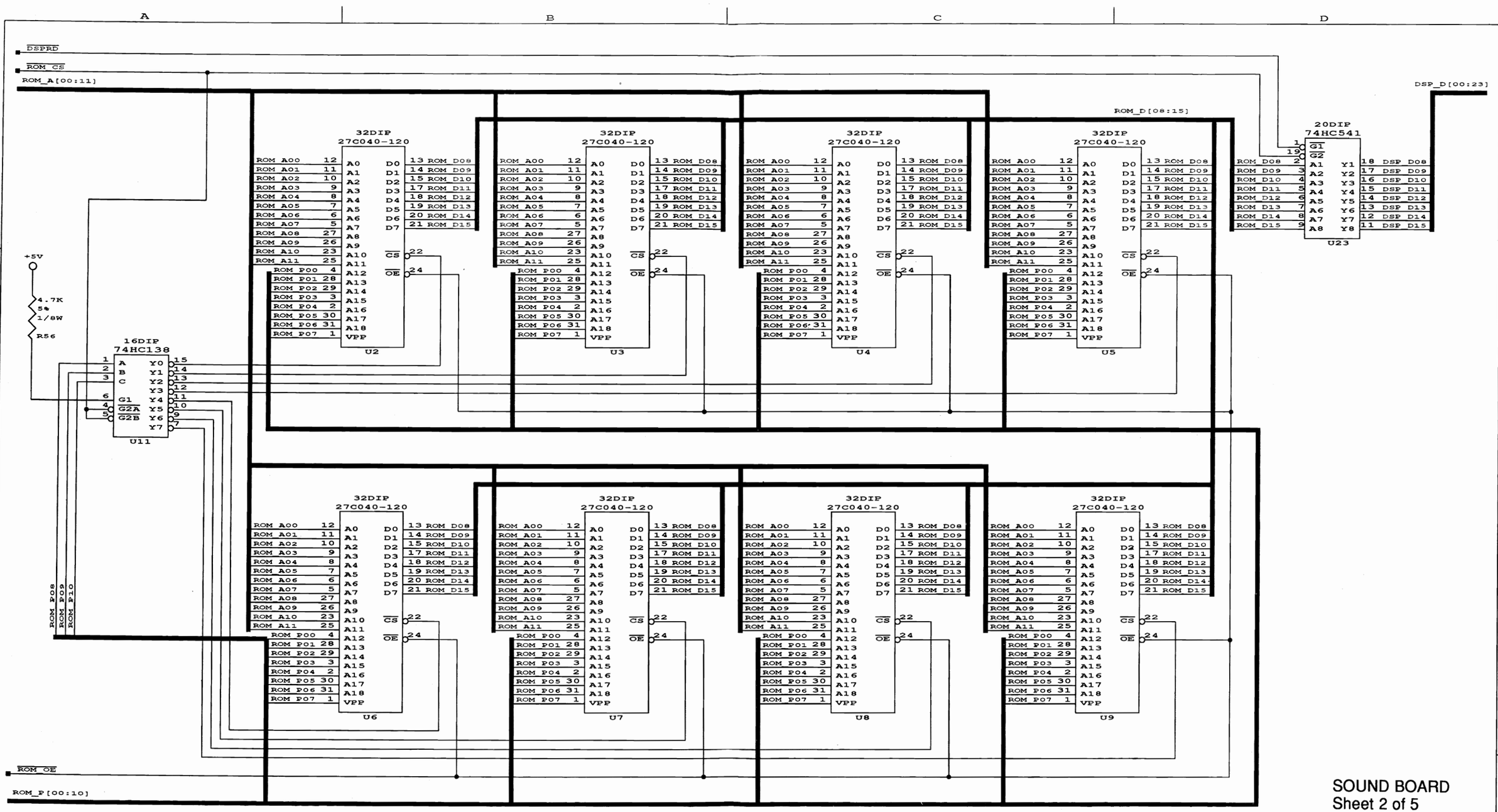

SOUND BOARD
Sheet 2 of 5

ECN	CHANGE	DATE

INFORMATION CONTAINED HEREIN IS CONFIDENTIAL PROPERTY AND MAY NOT BE USED OR DISCLOSED WITHOUT EXPRESS WRITTEN CONSENT FROM THE COMPANY.

PROJECT ENG. John Lowes	1ST PROJ. NO. DATE	WILLIAMS ELECTRONICS GAMES MIDWAY MANUFACTURING CO. 3401 N. CALIFORNIA AVENUE CHICAGO ILLINOIS USA
DWN. BY DATE JML 9-1-1993_17:39	1ST USEAGE DATE 40029	TITLE DCS Video Sound Board
CHECKED DATE	CURRENT PROJ. DATE	
APPROVED DATE	SHEET 2 OF 5	PART NO. 5766-13825-01 REV.

Aux In

DACSTB
100 5% 1/8W R45
14DIP 74HC14 U38
100pF 50V 20% C11
+5V
16DIP AD1851 U16
-VA DGND +VD NC CLK LTCH DATA -VD
+VA TRIM MSBA IOUT AGND SJ RFB VOUT
-5A
+5A
0.1uF 50V 20% C55
DAC CLK
DACDAT
0.1uF 50V 20% C52
0.1uF 50V 20% C53
0.1uF 50V 20% C54
AGND
DACOUT
156C2 F6
WIRE JMPR J6
DACSIG

+12V
Jumper for kits
WIRE JMPR J5
V AUD
2200UF 16V 20% C34
0.01uF 50V +80/-20% C39
SIP12 MB3731 U20
IN NC BYPASS FB MUTE GND_IN
Vcc BS-M OUT-M OUT-I BS-I GND_OUT
100uF 25V 20% C31
+SPKR
-SPKR
FILM 0.1UF 100V 10% C58
To P1 Page 6
FILM 0.1UF 100V 10% C59
FILM 0.1UF 100V 10% C60
100K 5% 1/8W R3
10uF 25V 20% C106
220UF 16V 20% C33
10uF 25V 20% C1
47uF 25V 20% C2

10uF 25V 20% C100
6.19K 1% 1/8W R44
6.19K 1% 1/8W R33
6.19K 1% 1/8W R34
3900pF 50V 5% C48
47K 5% 1/8W R24
1000pF 50V 20% C35
680pF 50V 20% C101
TL084 U37
6.19K 1% 1/8W R35
6.19K 1% 1/8W R36
1000pF 50V 20% C38
3900pF 50V 5% C49
6.19K 1% 1/8W R37
680pF 50V 20% C102

6.19K 1% 1/8W R43
6.19K 1% 1/8W R42
6.19K 1% 1/8W R41
680pF 50V 5% C51
1000pF 50V 20% C36
680pF 50V 20% C104
0.1uF 50V 20% C56
0.1uF 50V 20% C57
6.19K 1% 1/8W R40
6.19K 1% 1/8W R39
1000pF 50V 20% C37
3900pF 50V 5% C50
6.19K 1% 1/8W R38
680pF 50V 20% C103
39K 5% 1/8W R46
820 5% 1/8W R2
1K 5% 1/8W R1
156C2 P7
Line Out

SOUND BOARD
Sheet 3 of 5

ECN	CHANGE	DATE

INFORMATION CONTAINED HEREIN IS CONFIDENTIAL PROPERTY AND MAY NOT BE USED OR DISCLOSED WITHOUT EXPRESS WRITTEN CONSENT FROM THE COMPANY.

PROJECT ENG. John Lowes	1ST PROJ. NO. DATE	WILLIAMS ELECTRONICS GAMES MIDWAY MANUFACTURING CO. 3401 N. CALIFORNIA AVENUE CHICAGO ILLINOIS USA
DWN. BY JML DATE 9-1-1993_17:39	1ST USEAGE 40029 DATE	TITLE DCS Video Sound Board Anti-Aliasing Filter
CHECKED DATE	CURRENT PROJ. DATE	
APPROVED DATE	SHEET 3 OF 5	PART NO. 5766-13825-01 REV. -

HOST_D[00:07]

HOST D00
HOST D01
HOST D02
HOST D03
HOST D04
HOST D05
HOST D06
HOST D07

20DIP 74LS374 U19 — OE, CLK, D1–D8, Q1–Q8

16DIP 26LS31 U25 — EN1, EN2, INA, INB, INC, IND, OUTA, OUTA, OUTB, OUTB, OUTC, OUTC, OUTD, OUTD

16DIP 26LS32A U12 — EN1, EN2, 1A, 1B, 2A, 2B, 3A, 3B, 4A, 4B, 1Y, 2Y, 3Y, 4Y

16DIP 26LS31 U26 — EN1, EN2, INA, INB, INC, IND, OUTA, OUTA, OUTB, OUTB, OUTC, OUTC, OUTD, OUTD

16DIP 26LS32A U13 — EN1, EN2, 1A, 1B, 2A, 2B, 3A, 3B, 4A, 4B, 1Y, 2Y, 3Y, 4Y

16DIP 26LS31 U27 — EN1, EN2, INA, INB, INC, IND, OUTA, OUTA, OUTB, OUTB, OUTC, OUTC, OUTD, OUTD

16DIP 26LS32A U14 — EN1, EN2, 1A, 1B, 2A, 2B, 3A, 3B, 4A, 4B, 1Y, 2Y, 3Y, 4Y

100 5% 1/8W R49

+5V
470 5% 1/8W R4
220 5% 1/8W R47

Biased at 1.6V

47 5% 1/8W R19 — SND D00
47 5% 1/8W R5 — SND D01
47 5% 1/8W R6 — SND D02
47 5% 1/8W R7 — SND D03
47 5% 1/8W R11 — SND D04
47 5% 1/8W R10 — SND D05
47 5% 1/8W R9 — SND D06
47 5% 1/8W R8 — SND D07

100pF 50V 20% C12
100pF 50V 20% C13
100pF 50V 20% C14
100pF 50V 20% C15
EGND

WIRE JMPR J11

0.100 P4

100pF 50V 20% C16
100pF 50V 20% C17
100pF 50V 20% C18
100pF 50V 20% C19
EGND

47 5% 1/8W R14 — SND DAV
47 5% 1/8W R13 — B SND RD
47 5% 1/8W R12 — SND RDY
47 5% 1/8W R15 — SNDVIDRD
47 5% 1/8W R16 — B VIDDAV
47 5% 1/8W R17 — SND SRES
47 5% 1/8W R18 — B VIDRES

100pF 50V 20% C20
100pF 50V 20% C21
100pF 50V 20% C22
EGND

+5V
4.7K 5% 1/8W R29
4.7K 5% 1/8W R30
100 5% 1/8W R48

Stuff jumper for parallel interface

HOST RD — WIRE JMPR J7
HOST WR
DSP IRQ — WIRE JMPR J15

14DIP 74LS74 U18 — PRE, CLK, D, Q, Q, CLR
WR ACK
WR EN
RDY CLK

SOFT RES
HARD RES

4.7K 5% 1/8W R25
4.7K 5% 1/8W R26
4.7K 5% 1/8W R27
4.7K 5% 1/8W R28

100pF 50V 20% C26
100pF 50V 20% C25
100pF 50V 20% C24
100pF 50V 20% C23
EGND

SOUND BOARD
Sheet 4 of 5

ECN	CHANGE	DATE

INFORMATION CONTAINED HEREIN IS CONFIDENTIAL PROPERTY AND MAY NOT BE USED OR DISCLOSED WITHOUT EXPRESS WRITTEN CONSENT FROM THE COMPANY.

PROJECT ENG. John Lowes	1ST PROJ. NO. DATE	WILLIAMS ELECTRONICS GAMES MIDWAY MANUFACTURING CO. 3401 N. CALIFORNIA AVENUE CHICAGO ILLINOIS USA
DWN. BY DATE JML 9-1-1993_17:40	1ST USEAGE DATE 40029	TITLE DCS Video Sound Board
CHECKED DATE	CURRENT PROJ. DATE	
APPROVED DATE	SHEET 4 OF 5	PART NO. 5766-13825-01 REV.

Reset Circuit

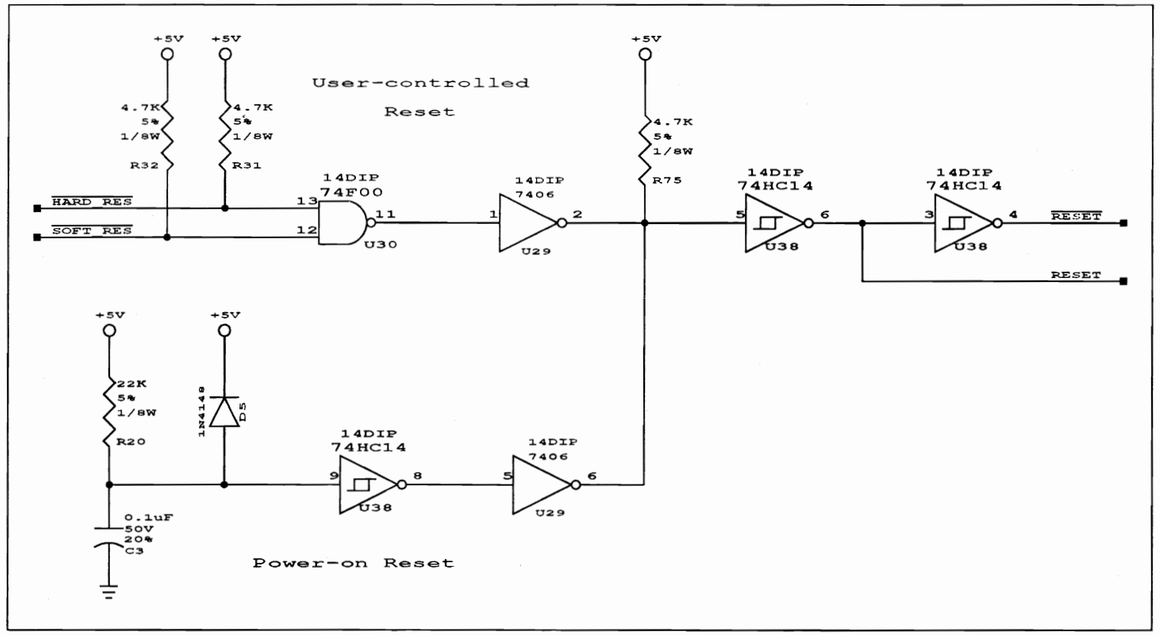

GROUND ISOLATION

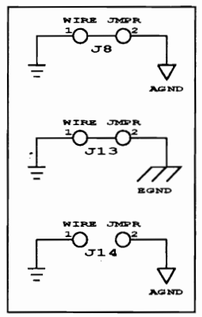

Analog/Digital Power

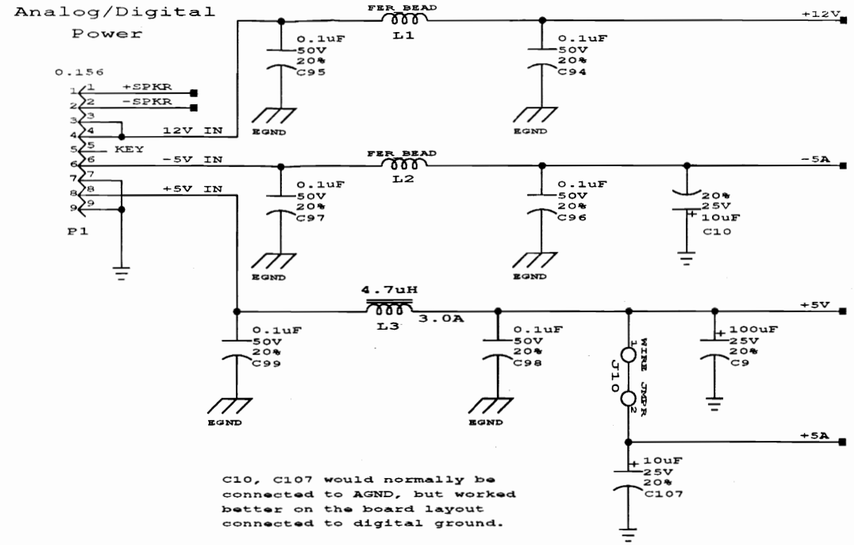

C10, C107 would normally be connected to AGND, but worked better on the board layout connected to digital ground.

Spare Gates

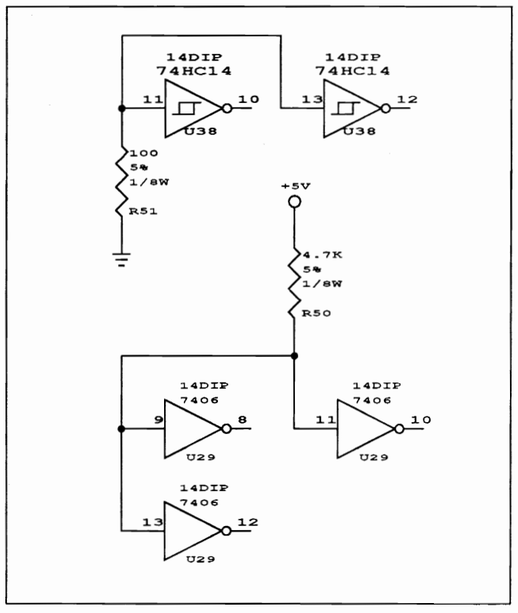

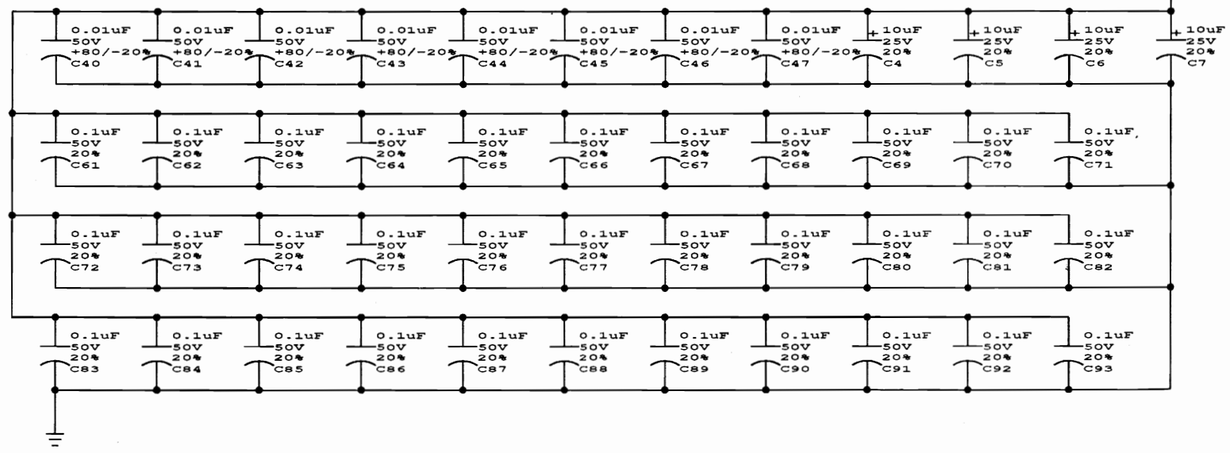

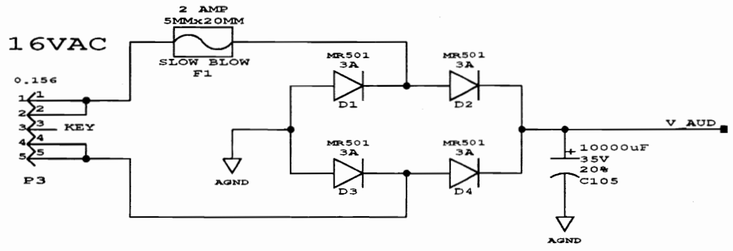

SOUND BOARD
Sheet 5 of 5

ECN	CHANGE	DATE

INFORMATION CONTAINED HEREIN IS CONFIDENTIAL PROPERTY AND MAY NOT BE USED OR DISCLOSED WITHOUT EXPRESS WRITTEN CONSENT FROM THE COMPANY.

PROJECT ENG. John Lowes	1ST PROJ. NO. DATE	WILLIAMS ELECTRONICS GAMES MIDWAY MANUFACTURING CO. 3401 N. CALIFORNIA AVENUE CHICAGO ILLINOIS USA
DWN. BY JML DATE 9-1-1993_17:41	1ST USEAGE DATE 40029	TITLE DCS Video Sound Board
CHECKED DATE	CURRENT PROJ. DATE	
APPROVED DATE	SHEET 5 OF 5	PART NO. 5766-13825-01 REV.

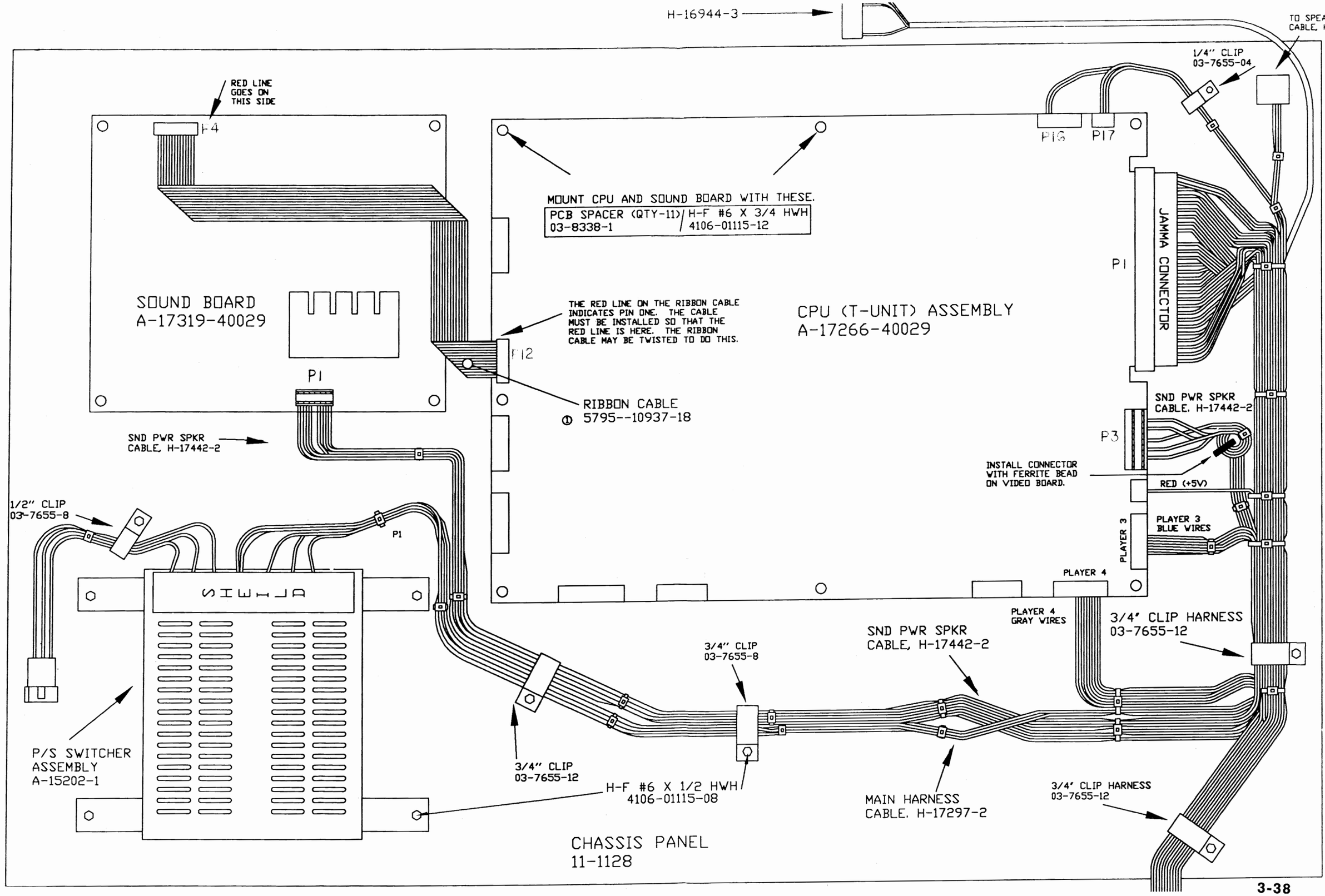
H-16944-3
TO SPEAKER CABLE, H-173
1/4" CLIP 03-7655-04
RED LINE GOES ON THIS SIDE
P4
P16
P17
MOUNT CPU AND SOUND BOARD WITH THESE.
PCB SPACER (QTY-11) 03-8338-1
H-F #6 X 3/4 HWH 4106-01115-12
JAMMA CONNECTOR
P1
SOUND BOARD A-17319-40029
THE RED LINE ON THE RIBBON CABLE INDICATES PIN ONE. THE CABLE MUST BE INSTALLED SO THAT THE RED LINE IS HERE. THE RIBBON CABLE MAY BE TWISTED TO DO THIS.
CPU (T-UNIT) ASSEMBLY A-17266-40029
P12
RIBBON CABLE ① 5795--10937-18
SND PWR SPKR CABLE, H-17442-2
P3
INSTALL CONNECTOR WITH FERRITE BEAD ON VIDEO BOARD.
RED (+5V)
PLAYER 3 BLUE WIRES
PLAYER 3
PLAYER 4
PLAYER 4 GRAY WIRES
1/2" CLIP 03-7655-8
P1
3/4" CLIP HARNESS 03-7655-12
SND PWR SPKR CABLE, H-17442-2
3/4" CLIP 03-7655-8
P/S SWITCHER ASSEMBLY A-15202-1
3/4" CLIP 03-7655-12
H-F #6 X 1/2 HWH 4106-01115-08
MAIN HARNESS CABLE, H-17297-2
3/4" CLIP HARNESS 03-7655-12
CHASSIS PANEL 11-1128

THIS SIDE UP

Control Panel Wire Colors

Player One

Start	White
Up (Jump)	White-Black
Down (Duck)	White-Brown
Left (Move)	White-Red
Right (Move)	White-Orange
High Punch	White-Yellow
Block	White-Green
High Kick	White-Blue
Low Punch	Blue-Black
Low Kick	Blue-Brown
Ground	Black

Player Two

Start	Violet-White
Up (Jump)	Violet-Black
Down (Duck)	Violet-Brown
Left (Move)	Violet-Red
Right (Move)	Violet-Orange
High Punch	Violet-Yellow
Block	Violet-Green
High Kick	Violet-Blue
Low Punch	Blue-Yellow
Low Kick	Blue-Green
Ground	Black

PC Board Jumpers

CPU Board

J18, J19, J22, J24, J28, R154	0Ω Resistor, 1/4W

Sound Board

J5, J8, J10, J13	Wire Insulated Jumper
J1, J4, J6, J7, J15	0Ω Resistor, 1/4W

WARNINGS & NOTICES

Warning
USE OF NON-MIDWAY PARTS OR CIRCUIT MODIFICATIONS MAY CAUSE SERIOUS INJURY OR EQUIPMENT DAMAGE! USE ONLY MIDWAY AUTHORIZED PARTS.
* For safety and reliability, substitute parts and modifications are not recommended.
* Substitute parts or modifications may void FCC type acceptance.
* This game is protected by federal copyright, trademark and patent laws. Unauthorized modifications may be illegal under Federal law. This also applies to MIDWAY logos, designs, publications and assemblies. Moreover, facsimiles of MIDWAY equipment (or any feature thereof) may be illegal under federal law, regardless of whether or not such facsimiles are manufactured with MIDWAY components.

Warning
Note: This equipment has been tested and found to comply with the limits for a Class A digital device, pursuant to Part 15 of the FCC Rules. These limits are designed to provide reasonable protection against harmful interference when the equipment is operated in a commercial environment. This equipment generated, uses and can radiate radio frequency energy and if not installed and used in accordance with the instruction manual, may cause harmful interference to radio communications. Operation of this equipment in a residential area is likely to cause harmful interference in which case the user will be required to correct the interference at his own expense.

Warning
Prevent shock hazard and assure proper game operation. Only plug this game into a properly grounded outlet. Do not use a cheater plug to defeat the power cord's grounding pin. Do not cut off the ground pin.

Notice
When MIDWAY ships a game, it is in compliance with FCC regulations. Your sticker is proof. If the sticker is missing or damaged, legal repercussions to the owner or distributor of the game may result. If your game does not contain an FCC sticker, call MIDWAY immediately.

Notice
No part of this publication may be reproduced by any mechanical, photographic, or electronic process, or in the form of a phonographic recording, nor may be transmitted, or otherwise copied for public or private use, without permission from the publisher.

Entire contents of this manual copyright © 1993 MIDWAY Manufacturing Company, INC. All Rights Reserved.

FOR SERVICE:
CALL YOUR AUTHORIZED MIDWAY DISTRIBUTOR.

MIDWAY Manufacturing Company
3401 N. CALIFORNIA AVE.
CHICAGO, IL 60618